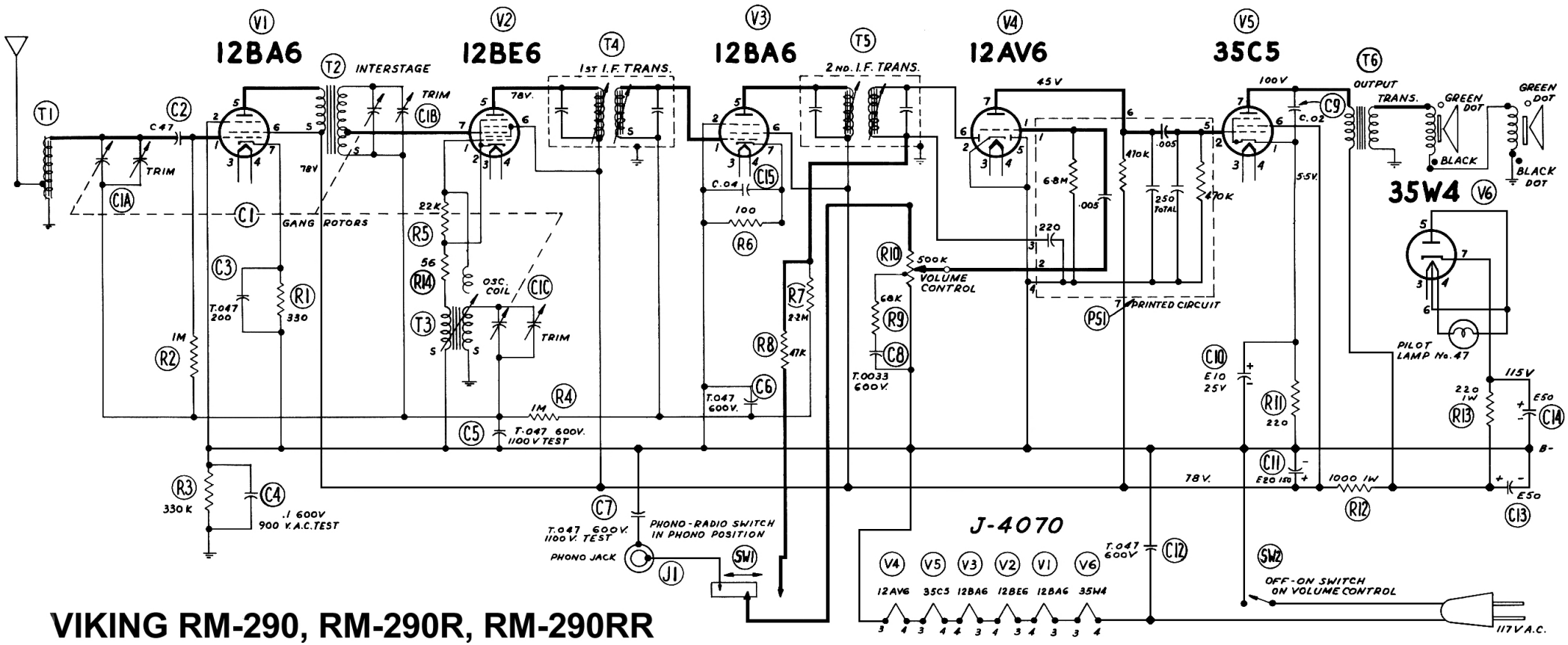

VIKING RM-290, RM-290R, RM-290RR

ALIGNMENT AND SENSITIVITY

SIGNAL GENERATOR MODULATED 30% AT 400 CY.

STEP	APPLY SIGNAL		THRU SERIES DUMMY	SET GANG AT	ADJUST FOR MAX. OUTPUT	NOMINAL SENSITIVITY FOR 50 MW. OUTPUT
	AT KC	TO				
1	455	12BA6 I.F. #1 PIN	.05	—	2ND I.F.	2200 μV.
2	455	12BE6 #7 PIN	.05	MIN. CAPACITY	1ST I.F. 2ND I.F	70
3	1460	12BA6 #1 PIN	.05	1460 KC	OSC. AND INTERSTAGE TRIMMERS	—
4	1460	ANT.	*	1460 KC	ANTENNA & INTERSTAGE TRIMMERS	60 μV/M
5	600	ANT.	*	600 KC	CHECK ONLY	170 μV/M
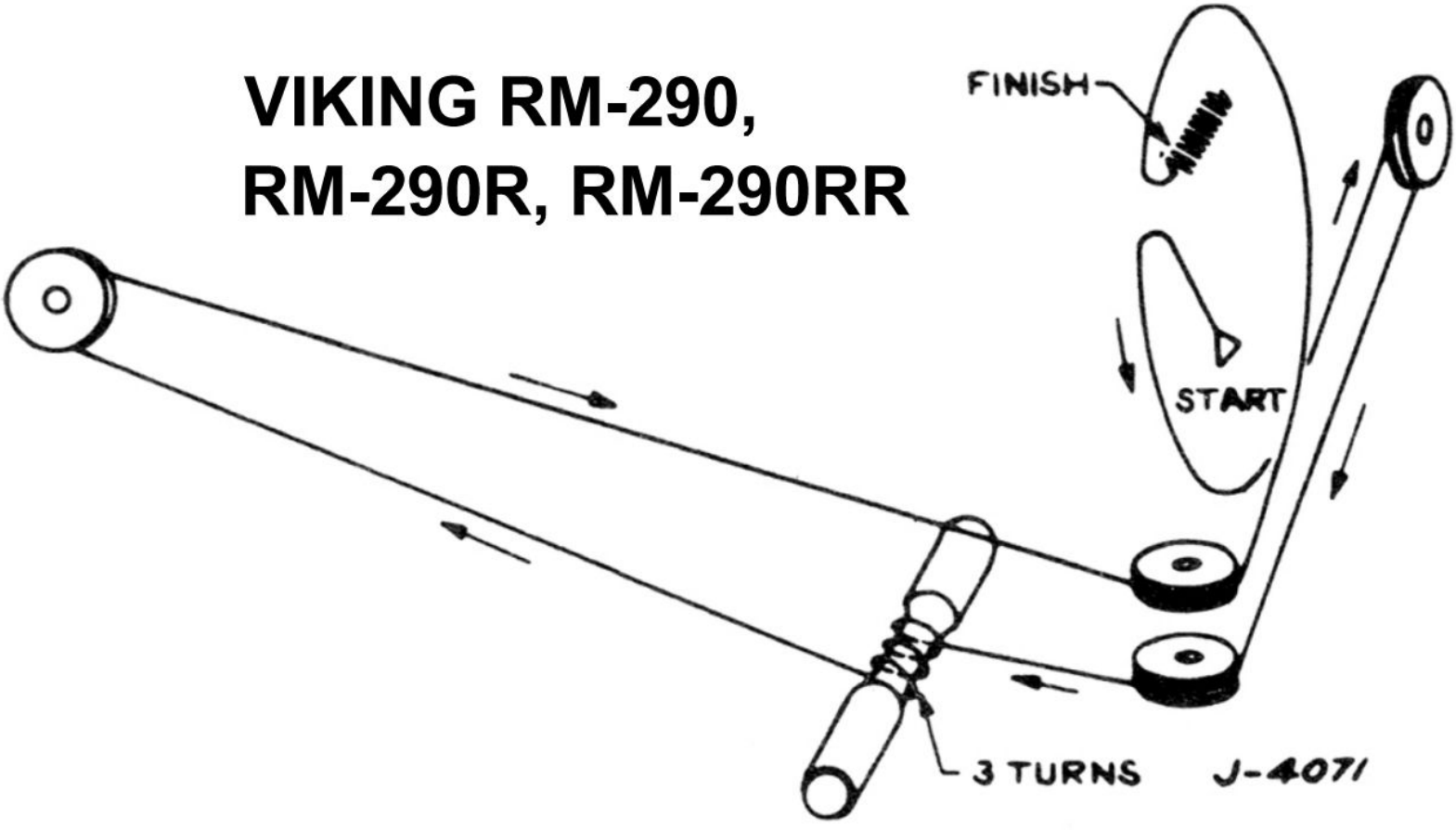
VIKING RM-290, RM-290R, RM-290RR