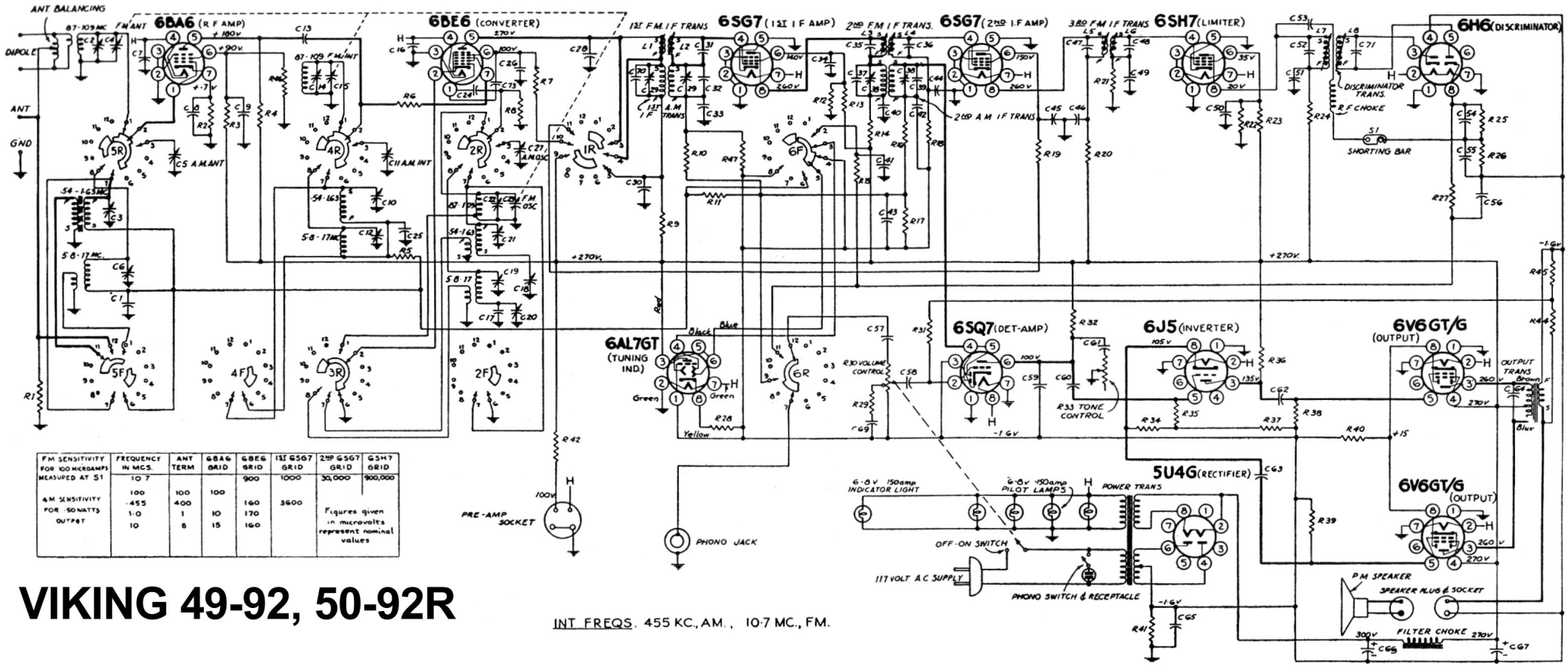

FM SENSITIVITY FOR 100 MICROAMPS MEASURED AT S1	FREQUENCY IN MCS.	ANT TERM	6BA6 GRID	6BE6 GRID	1ST 6SG7 GRID	2ND 6SG7 GRID	6SH7 GRID
	10·7			900	1000	30,000	900,000
	100	100	100				
AM SENSITIVITY FOR ·50 WATTS OUTPUT	·455	400		160	3600		
	1·0	1	10	170		Figures given in microvolts represent nominal values	
	10	8	15	160			

VIKING 49-92, 50-92R

No.	CAPACITORS
C 1	.05 μf 200V TUBULAR
C 2	3-12 μμf FM ANT TRIMMER
C 3	3-40 μμf B.C. ANT TRIMMER
C 4	FM ANT SECTION GANG CONDENSER
C 5	A M ANT SECTION GANG CONDENSER
C 6	4-40 μμf S W ANT TRIMMER
C 7	220 μμf ± 20% CERAMIC
C 8	.005 μf 450 V DISC CERAMIC
C 9	.005 μf 450 V. DISC CERAMIC
C 10	2-20 μμf B.C R F TRIMMER
C 11	A.M. R F SECTION GANG CONDENSER
C 12	2-20 μμf S W., R F TRIMMER
C 13	10 μμf ± 10% 500 V CERAMIC
C 14	3-12 μμf F M. R F TRIMMER
C 15	F M., R F SECTION GANG CONDENSER
C 16	220 μμf ± 20% CERAMIC
C 17	2500 μμf ± 5% FIXED S W PADDER
C 18	150-600 μμf B C PADDER
C 19	1.5-15 μμf S W OSC TRIMMER
C 20	200-1000 μμf S W PADDER
C 21	1.5-15 μμf B.C OSC TRIMMER
C 22	3-12 μμf F M OSC TRIMMER
C 23	F M. OSC SECTION GANG CONDENSER
C 24	50 μμf ± 10% 500 V. CERAMIC
C 25	.01 μf 200 V TUBULAR
C 26	.005 μf 450 V. DISC CERAMIC
C 27	A M OSC SECTION GANG CONDENSER
C 28	30 μμf ± 10% 500 V.
C 29	60-220 μμf DUAL I.F TRIMMER
C 30	.005 μf 450 V. DISC CERAMIC
C 31	30 μμf ± 10% 500 V CERAMIC
C 32	40 μμf ± 10% 500 V CERAMIC
C 33	.01 μf 400 V TUBULAR
C 34	.01 μf 600 V. TUBULAR
C 35	30 μμf ± 10% 500 V CERAMIC
C 36	30 μμf ± 10% 500 V CERAMIC
C 37	40 μμf ± 10% 500 V. CERAMIC

No	CAPACITORS
C 38	60-220 μμf DUAL I F TRIMMER
C 39	40 μμf ± 10% 500 V CERAMIC
C 40	.01 μf 600 V TUBULAR
C 41	.01 μf. 200 V TUBULAR
C 42	150 μμf ± 20% 100 V CERAMIC
C 43	150 μμf ± 20% 100 V CERAMIC
C 44	.01 μf 200 V TUBULAR
C 45	.01 μf 600 V TUBULAR
C 46	.01 μf 600 V. TUBULAR
C 47	40 μμf ± 10% 500 V CERAMIC
C 48	40 μμf ± 10% 500 V CERAMIC
C 49	50 μμf ± 20% 500 V MICA
C 50	.005 μμf 500 V. DISC CERAMIC
C 51	.005 μμf 500 V DISC CERAMIC
C 52	30 μμf ± 10% 500 V CERAMIC
C 53	75 μμf ± 10% 500 V CERAMIC
C 54	100 μμf ± 5% 500 V MICA
C 55	100 μμf ± 5% 500 V MICA
C 56	750 μμf ± 10% 500 V MICA
C 57	.005 μf 600 V TUBULAR
C 58	.01 μf 200 V TUBULAR
C 59	260 μμf ± 20% 500 V MICA
C 60	.01 μf 600 V TUBULAR
C 61	.02 μf 600 V. TUBULAR
C 62	.02 μf 600 V TUBULAR
C 63	.02 μf 600 V. TUBULAR
C 64	.001 μf 600 V. TUBULAR
C 65	.05 μf 200 V TUBULAR
C 66	40 μf 450 V } DUAL ELECTROLYTIC
C 67	20 μf 450 V }
C 68	
C 69	.002 μf 200 V TUBULAR
C 70	40 μμf ± 10% 500 V CERAMIC
C 71	15 μμf ± 10% 500 V CERAMIC
C 72	
C 73	5 μμf ± 10% TEMPERATURE COMPENSATOR

No	RESISTORS
R 1	1 megohm ± 20% 1/4 W
R 2	56 ohm ± 10% 1/4 W
R 3	47,000 ohm ± 20% 1 W
R 4	10,000 ohm ± 20% 1 W
R 5	1 megohm ± 20% 1/4 W.
R 6	10 ohm ± 10% 1/4 W NON-INDUCTIVE
R 7	22,000 ohm ± 10% 1 W
R 8	22,000 ohm ± 20% 1/4 W
R 9	1,000 ohm ± 20% 1/2 W
R 10	1 megohm ± 20% 1/4 W
R 11	1 megohm ± 20% 1/4 W
R 12	27,000 ohm ± 10% 1 W
R 13	18,000 ohm ± 10% 1 W
R 14	1,000 ohm ± 20% 1/2 W
R 15	1 megohm ± 20% 1/4 W
R 16	47,000 ohm ± 20% 1/5 W
R 17	390,000 ohm ± 20% 1/4 W
R 18	100,000 ohm ± 20% 1/4 W
R 19	33,000 ohm ± 20% 1 W
R 20	1,000 ohm ± 20% 1/2 W
R 21	47,000 ohm ± 20% 1/4 W
R 22	47,000 ohm ± 20% 1/4 W
R 23	120,000 ohm ± 20% 1/2 W
R 24	120,000 ohm ± 20% 1/2 W
R 25	100,000 ohm ± 5% 1/4 W
R 26	100,000 ohm ± 5% 1/4 W.
R 27	100,000 ohm ± 20% 1/4 W
R 28	3300 ohm ± 20% 1/4 W
R 29	220,000 ohm ± 20% 1/4 W.
R 30	2 megohm Control tapped at 1 megohm
R 31	4.7 megohm ± 20% 1/4 W
R 32	220,000 ohm ± 20% 1/4 W
R 33	150,000 ohm Control
R 34	2200 ohm ± 10% 1/4 W
R 35	220,000 ohm ± 20% 1/4 W.
R 36	150,000 ohm ± 5% 1/4 W
R 37	150,000 ohm ± 5% 1/4 W.

No	RESISTORS
R 38	470,000 ohm ± 10% 1/4 W.
R 39	470,000 ohm ± 10% 1/4 W
R 40	240 ohm ± 10% 2 W
R 41	30 ohm ± 5% 1/4 W
R 42	18,000 ohm ± 10% 1 W.
R 43	
R 44	160 ohm ± 5% 1/2 W
R 45	160 ohm ± 5% 1/2 W
R 46	33,000 ohm ± 20% 1/2 W
R 47	220,000 ohm ± 20% 1/2 W

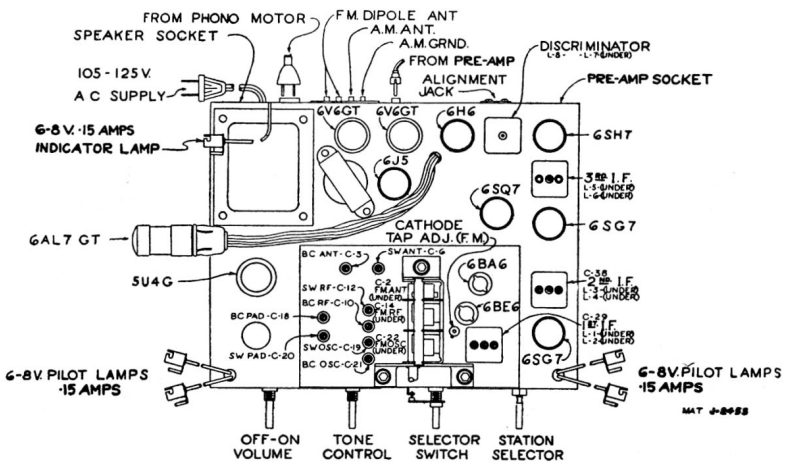

CHASSIS LAYOUT CHART

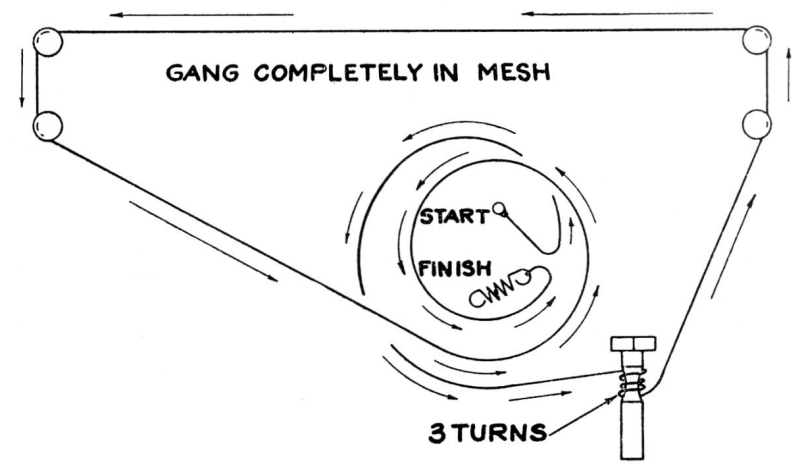

STRINGING DETAIL

SPECIFICATIONS

Standard Broadcast Range	540 Kc — 1650 Kc
Short Wave Range	5.7Mc. - 17.4Mc.
Frequency Modulation Range	88 MC — 108 Mc
Intermediate Frequency (AM)	455 Kc
Intermediate Frequency (FM)	10.7 Mc
Power Consumption (Radio Only)	106 Watts
Power Consumption (Radio & Phono)	125 Watts
Undistorted Output	5.5 Watts
Maximum Power Output	8.1 Watts

Band selector switch shown in extreme counterclock-wise position (Phono), numeral denotes wafer back from front chassis skirt and letter designates front or rear of indicated wafer

All voltages measured to chassis with 20,000 ohm/volt meter at 117v. line voltage and selector switch in FM position and zero input

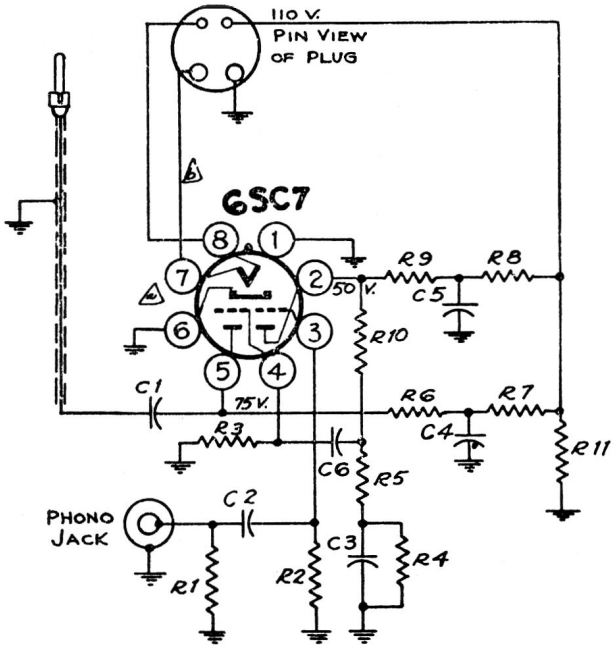

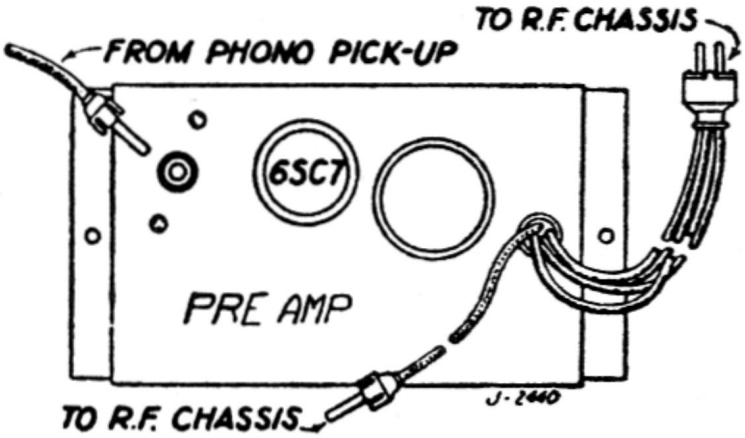

C. N. No.	DATE	CHANGE
3331	10:18:48	#7 & 6 WERE G'N'D ⚠; WIRE ADDED TO #7 TO PLUG (6SC7)

F. M. ALIGNMENT

INFORMATION FOR SERVICE-MEN

PRE-AMP

FM—Intermediate frequency amplifier and discriminator

First: With a sensitive DC microammeter connected in place of the shorting bar S1, and an unmodulated 10.7 Mc signal applied to the 6BE6 control grid, adjust L7, L6, L5, L4, L3, L2 and L1 for maximum current. The signal should be attenuated to maintain the current at approximately 60 microamperes.

Second: Replace the shorting bar S1, and connect a vacuum tube voltmeter between the junction of R27 and C56 and B minus. With the same signal applied L8 only of the discriminator transformer should be adjusted to obtain the zero DC voltage point lying between the positive and negative swings of the vacuum tube voltmeter. As L8 is detuned far from resonance in either direction the voltage will approach zero. However, when slightly detuned the voltage will be positive on one side of resonance and negative on the other side. The correct setting is half way between these points where the voltage passes through zero. As a final check on the accuracy of the discriminator alignment, the DC voltage variations should be observed as the signal frequency is varied either side of 10.7 Mc. The voltage increase as the frequency is shifted, say 100 Kc., in one direction, should be the same as the voltage decrease as the frequency is shifted 100 Kc. in the other direction. Discrepancies here may be corrected by a slight adjustment of L7. For example if the voltage becomes plus 3.5 volts for a 100 Kc. frequency shift in one direction and minus 2.5 volts for a 100 Kc. shift in the opposite direction, a slight adjustment of L7 will make these two voltages equal at about 3 volts.

CONDENSERS			
C1	.02 μf.	600 V.	TUBULAR
C2	.05 μf.	200 V.	TUBULAR
C3	.01 μf.	600 V.	TUBULAR
C4	15 μf.	150 V.	ELECTROLYTIC
C5	15 μf.	150 V.	ELECTROLYTIC
C6	.05 μf.	200 V.	TUBULAR
RESISTORS			
R1	6800 Ω	± 20%	½ W.
R2	3.3 megohm	± 20%	½ W.
R3	3.3 megohm	± 20%	½ W.
R4	180,000 Ω.	± 10%	½ W.
R5	27,000 Ω	± 10%	½ W
R6	33,000 Ω	± 20%	½ W.
R7	33,000 Ω	± 20%	½ W.
R8	68,000 Ω	± 20%	½ W.
R9	68,000 Ω	± 20%	½ W.
R10	220,000 Ω	± 20%	½ W
R11	15,000 Ω	± 20%	1 W.

F.M. R.F. AMPLIFIER AND CONVERTER

The F.M. R.F. trimmers C22, C14, and C2 should be adjusted with an applied signal at the dipole terminals of 105 Mc. and a sensitive DC microammeter connected in place of the shorting bar S1. The signal should be attenuated to maintain this current at approximately 60 microamperes. With an applied signal of 91 Mc. the sensitivity should be checked and should be comparable with that at 105 Mc. The trimmers should not be altered from their 105 Mc. setting but the gang F.M rotor plates may be bent to improve the 91 Mc. sensitivity if necessary.