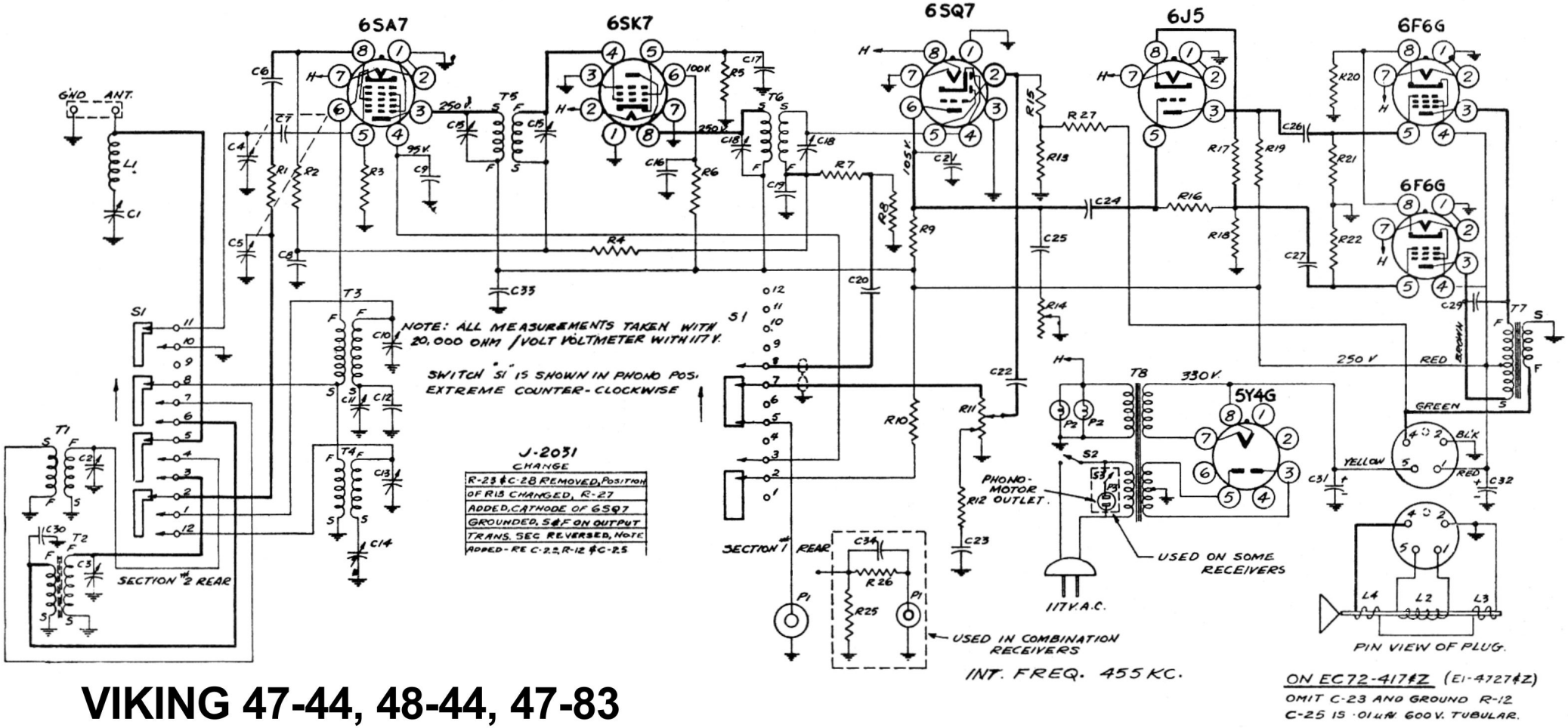

VIKING 47-44, 48-44, 47-83

C1	40-80 MMFD WAVE TRAP TRIMMER.
C2	15-15 MMFD. H.F. ANT TRIMMER
C3	1.5-15 MMFD. B.C ANT. TRIMMER.
C4	OSC. GANG CONDENSER.
C5	ANT GANG. CONDENSER
C6	260 MMFD. ± 20% 500 V. MICA
C7	50 MMFD ± 20% 500 V. MICA
C8	.05 MFD. 400 V. TUBULAR.
C9	.05 MFD. 600 V. TUBULAR.
C10	4-40 MMFD H.F. OSC. TRIMMER.
C11	200-1000 MMFD H.F. PAD.
C12	2500 MMFD. ±5% H.F FIXED MICA PAD
C13	4-40 MMFD. B.C. OSC. TRIMMER.
C14	150-600 MMFD. B.C PAD.
C15	60-220 DUAL I.F TRIMMER.
C16	.05 MFD. 600 V. TUBULAR.
C17	.05 MFD. 400 V. TUBULAR.
C18	60-220 DUAL I.F TRIMMER.
C19	260 MMFD. ± 20% 500 V. MICA.
C20	.005 MFD. 600 V. TUBULAR.
C21	260 MMFD. ± 20% 500 V. MICA.
C22	.01 MFD. 600 V. TUBULAR
C23	.005 MFD. 600 V. TUBULAR.
C24	.01 MFD. 600 V. TUBULAR.
C25	.02 MFD. 600 V. TUBULAR.
C26	.01 MFD. 600 V. TUBULAR
C27	.01 MFD. 600 V. TUBULAR.
C28	
C29	.001 MFD 600 V TUBULAR
C30	200 MFD. ± 20% 500 V MICA
C31	40 MFD. 450 V } DUAL
C32	20 MFD 450 V } ELECTROLYTIC.
C33	.05 MFD. 600 V. TUBULAR COND.
C34	.001 MFD. 600 V. TUBULAR.

R1	56 Ω ± 10% 1/4 W. CARBON
R2	1 MEG Ω ± 20% 1/4 W.
R3	22,000 Ω ± 10% 1/4 W.
R4	2.2 MEG Ω ± 20% 1/4 W.
R5	47 Ω ± 10% 1/4 W.
R6	47,000 Ω ± 20% 1/2 W.
R7	47,000 Ω ± 20% 1/4 W.
R8	390,000 Ω ± 10% 1/4 W.
R9	220,000 Ω ± 20% 1/4 W.
R10	18,000 Ω ± 10% 2 W.
R11	2 MEG Ω VOLUME CONTROL & O
R12	270,000 Ω ± 20% 1/4 W.
R13	12 Ω ± 5% 1 W.
R14	150,000 Ω TONE CONTROL.
R15	4.7 MEG Ω ± 20% 1/4 W.
R16	270,000 Ω ± 10% 1/4 W.
R17	2200 Ω ± 10% 1/2 W.
R18	150,000 Ω ± 5% 1/2 W.
R19	150,000 Ω ± 5% 1/4 W.
R20	240 Ω ± 10% 2 W.
R21	220,000 Ω ± 10% 1/4 W.
R22	220,000 Ω ± 10% 1/4 W.
R23	1.5 MEG Ω ± 20% 1/4 W.
R26	470,000 Ω ± 20% 1/4 W.
R27	30 Ω ± 20% 1/2 W. WIRE WOUND

T1	H.F. ANT. COIL
T2	B.C. ANT COIL
T3	H.F. OSC. COIL
T4	B.C. OSC COIL.
T5	1ST. I.F. TRANSFORMER.
T6	2ND. I.F. TRANSFORMER.
T7	OUTPUT TRANSFORMER COIL.
T8	POWER TRANSFORMER COIL
L1	WAVE TRAP COIL
L2	FIELD COIL 1050 Ω
L3	BUCKING COIL
L4	VOICE COIL
P1	PHONO JACK
P2	6-8V .250 A. PILOT BULB.
P3	PHONO MOTOR RECEPTACLE
S1	BAND SELECTOR SWITCH
S2	ON-OFF SWITCH (ON VOLUME CON
S3	PHONO MOTOR SWITCH.

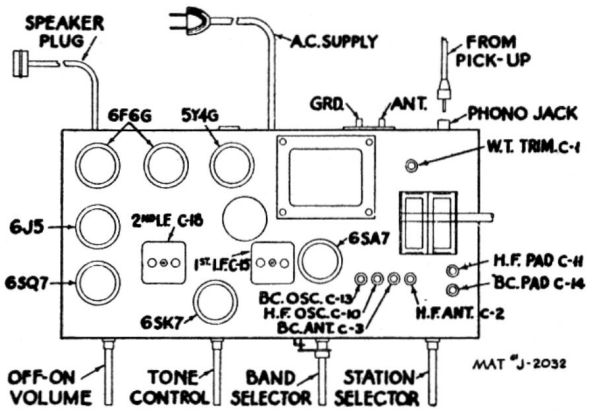

CHASSIS LAYOUT CHART

VIKING

47-44, 48-44, 47-83

SENSITIVITIES

Sensitivity in microvolts for 500 milliwatts output (voice coil impedence 3.2 ohms) carrier modulated 30% at 400 cycles.

	455 K.C.	1460 K.C.	900 K.C.	600 K.C.	16 M.C.	10 M.C.	6 M.C.
1st I.F. Grid	4400	—	—	—	—	—	—
Convertor Grid	88	82	82	84	86	86	86
Antenna.....	—	18	15	12	40	50	70

ALIGNMENT—PROCEED IN SEQUENCE LISTED.

Band	Band Switch Setting	Dummy Antenna	Connect Generator To	Radio Dial Setting	Generator Frequency	Trimmer Adjusted	Adjustment
2nd I.F.	B.C.	.05 Blocking Condenser	Grid of 6SK7	1650 K.C.	455 K.C.	C-18	Maximum Output
1st I.F.	B.C.	.05 Blocking Condenser	Grid of 6SA7 Convertor	1650 K.C.	455 K.C.	C-15	Maximum Output
455 K.C.	B.C.	200 mmfd.	Antenna	1650 K.C.	455 K.C.	C-1	Minimum Output
1460 K.C.	B.C.	200 mmfd.	Antenna	1460 K.C.	1460 K.C.	C-13 C-3	Maximum Output
600 K.C.	B.C.	200 mmfd.	Antenna	600 K.C.	600 K.C.	C-14	Maximum Output Rock Gang
16 M.C.	S.W.	400 ohm	Antenna	16 M.C.	16 M.C.	C-10 C-2	Maximum Output
6 M.C.	S.W.	400 ohm	Antenna	6 M.C.	6 M.C.	C-11	Maximum Output

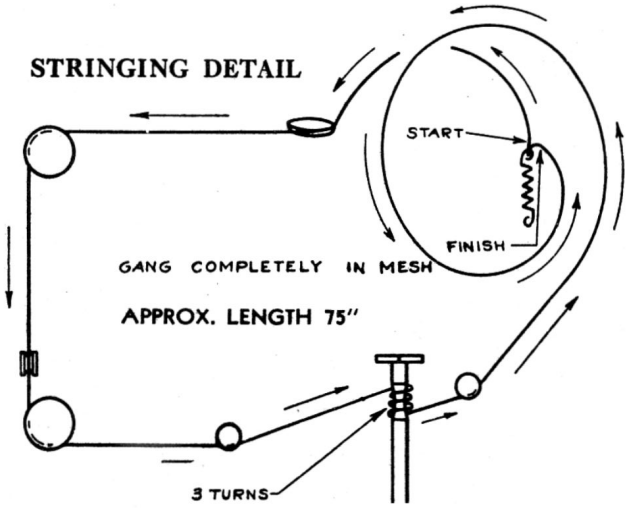

ALIGNMENT AND CALIBRATION

These receivers are carefully aligned and calibrated at the factory with precision instruments. If realignment is necessary, the following equipment is required:

(1) A signal generator to supply with accuracy the frequencies:

(a) 455 K.C., (b) 1460 K.C., (c) 600 K.C., (d) 16 M.C., (e) 6 M.C.

(2) A dependable Output meter.

Note 1—When aligning oscillator section at high frequencies, care should be taken that the receiver is not adjusted to an image frequency in place of the fundamental. At 16 M.C., fundamental will be obtained at minimum trimmer capacity.

Note 2—When aligning antenna trimmer at high frequencies, rock gang condenser back and forth to obtain maximum peak.