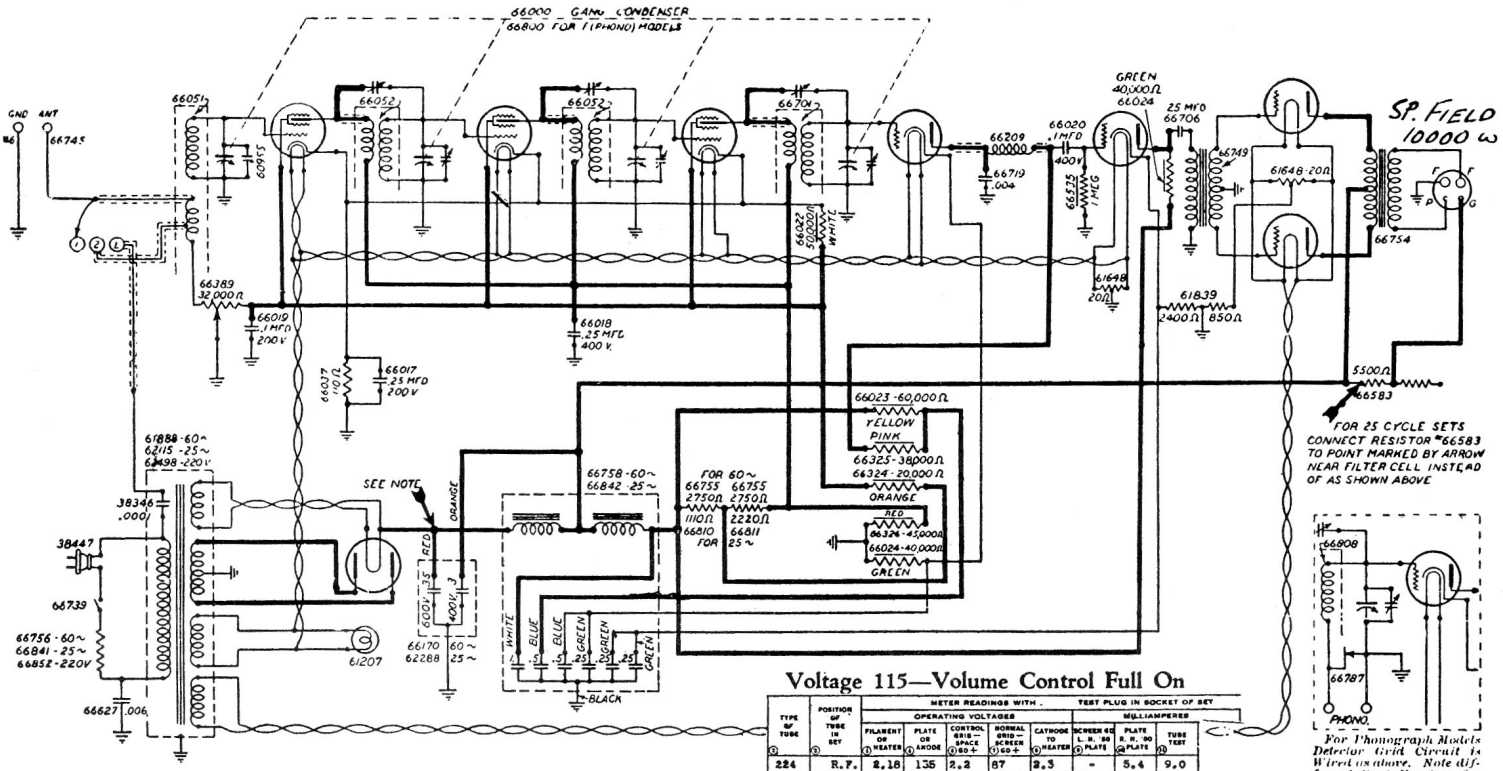

For Phonograph Models Detector Grid Circuit is Wired as above. Note different Part Number for Radio Frequency Transformer

Stewart-Warner Model R-100A

SPEAKER FIELD 10000 ω

Voltage 115—Volume Control Full On

TYPE OF TUBE (1)	POSITION OF TUBE IN SET (2)	METER READINGS WITH TEST PLUG IN SOCKET OF SET — OPERATING VOLTAGES: FILAMENT OR HEATER (3)	PLATE OR ANODE (4)	CONTROL GRID—SPACE (5) GD+	NORMAL GRID—SCREEN (6) GD+	CATHODE TO HEATER (7)	MILLIAMPERES: SCREEN GD L.H. '60 (8) PLATE	PLATE R.H. '60 (9) PLATE	TUBE TEST (10)
224	R.F.	2.18	135	2.2	87	2.3	-	5.4	9.0
227	Det.	2.2	165	-	15.5	17	-	.5	.6
227	1 A.F.	2.18	120	-	.6	9	-	3.6	4.1
245	PP-AF	2.3	245	-	48	-	-	27	30

1930-31

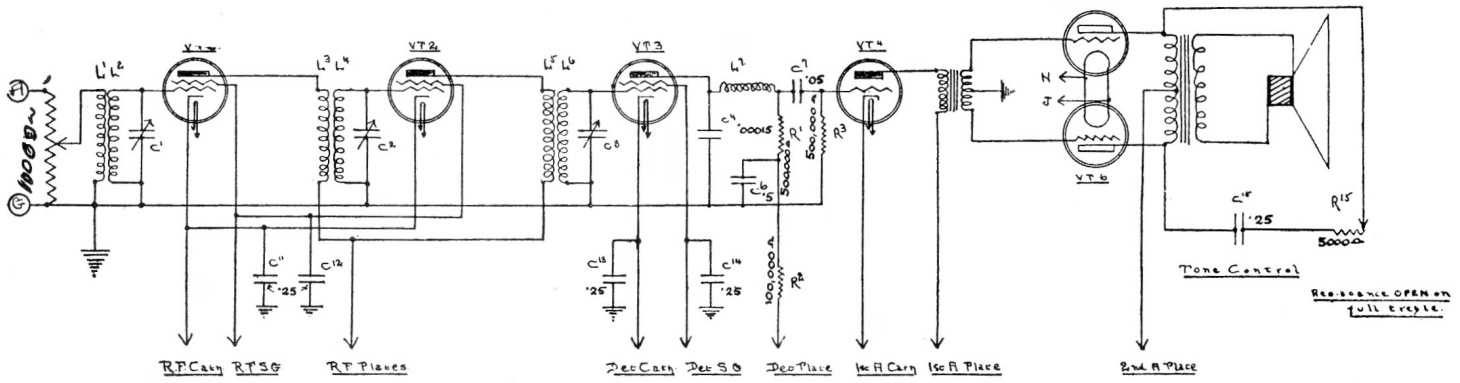

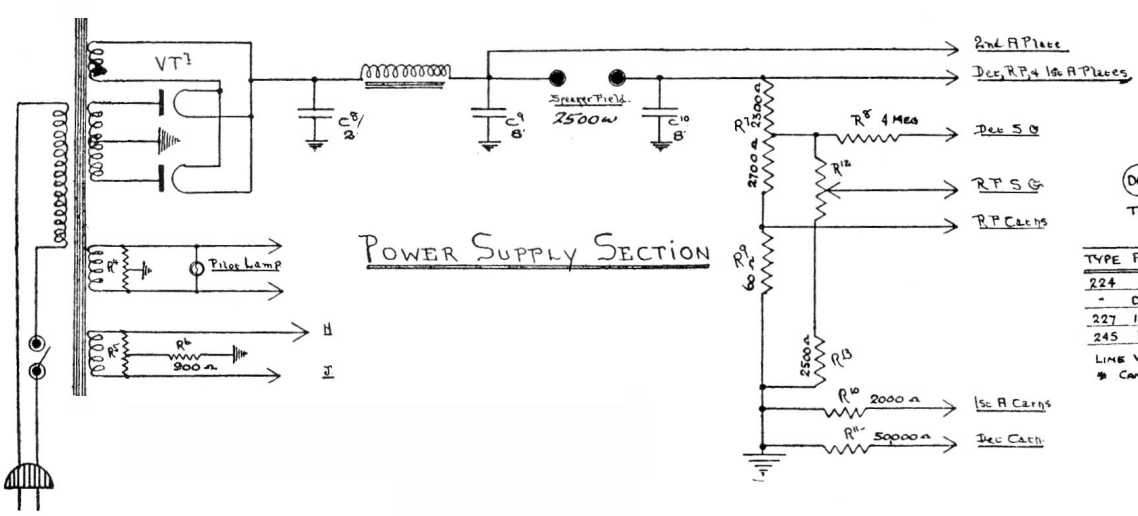

POWER SUPPLY SECTION

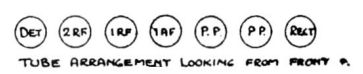

TUBE ARRANGEMENT LOOKING FROM FRONT ⊕.

TYPE	POS.	'A' VOLT	'B' VOLTS	'C' VOLTS	CATH	S.SEQ VOLTS	SCREEN CURRENT	MA
224	RF	2.2	150	2.1	2.1	70	1	4
-	DETC	-	*	*	*	*	*	*
227	1 A.F.	-	150	*	8.4	—	—	4.9
245	P.P.	-	245	50	—	—	—	28

LINE VOLTAGE 115. VOLUME CONTROL MAX.

* CANNOT BE ACCURATELY READ AT SOCKET.

SONORA
MODELS C34 AND 35.
1930-31.

NOTE – THE LOWER CIRCUIT IS MODEL SONORA MODELS C34 AND C35

—Courtesy Stewart-Warner Speedometer Corp.