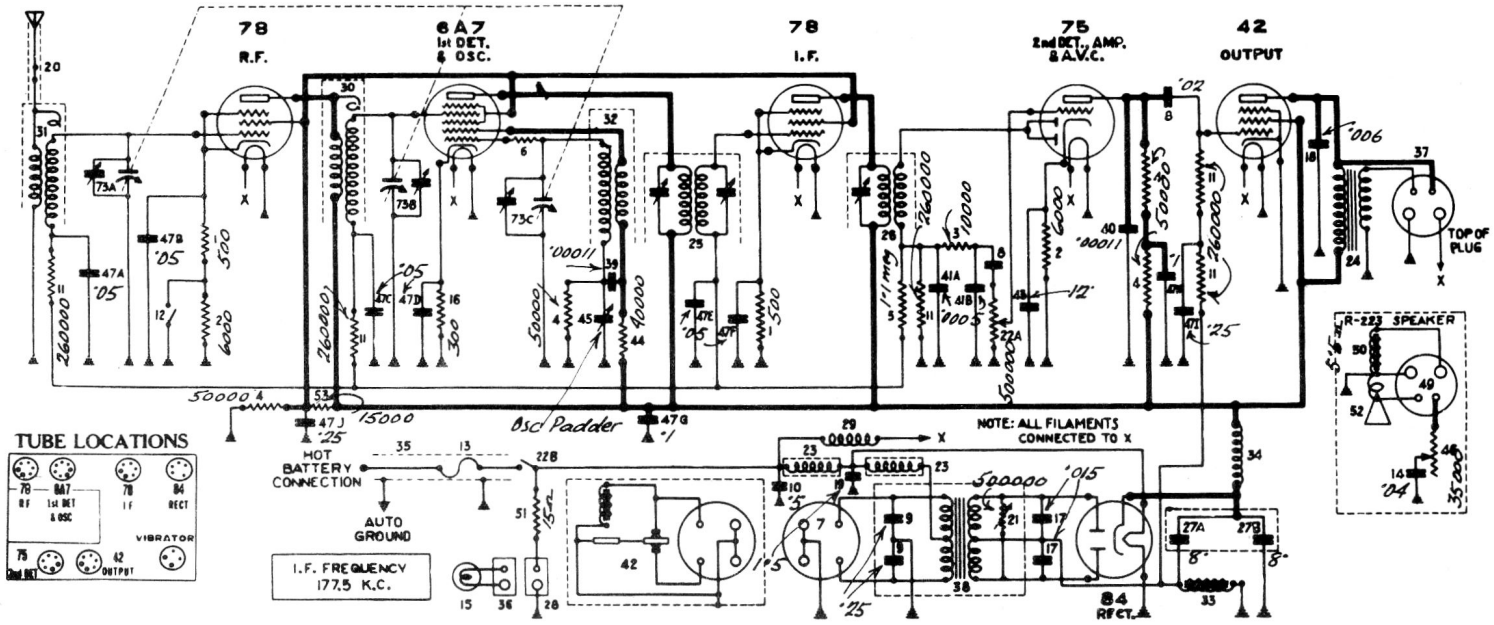

Model-117
1934-35.

IMPORTANT

All D.C. voltages measured from socket terminal to the chassis using a high resistance voltmeter of 1000 ohms per volt. Readings will depend upon the voltage range of the meter.

The values were obtained with a battery voltage of 6.0. The readings will vary with any other battery voltage.

STEWART-WARNER MODEL R-117

(R-1171 AUTO RADIO)

Circuit	Plate Voltage	Screen Grid Voltage	Cathode Voltage
R.F.	227	105	4.0
1st Det. & Osc.	227	105	2.6
I.F.	227	105	4.0
2nd Det.	148		1.8
Output	217	227	0
Rectifier			227

Note A: Oscillator grid voltage varies from 0 to 1400 K.C. to -5.0 at 600 K.C. Oscillator anode voltage may vary from 118 at 1400 K.C. to 128 volts at 600 K.C.

Note B: Actual bias voltage on the grid of the 42 tube is -15.5 which must be measured from ground to the filter choke terminal. Due to the high resistance grid leak, the voltmeter will show only about -1 volt at the grid terminal.

1. Power Supply Protective Resistor

The filter system and the rectifier tube are protected against breakdown from the high peak voltages during the warming up period by means of a special Globar resistor connected across the high voltage secondary of the power transformer (No. 21 in the attached diagram). This resistor has the unique property of dropping rapidly in resistance as the voltage across it rises, so that when the set is first turned on and secondary voltage is high it acts as a load on the power transformer and keeps the voltage below the danger point until the tubes warm up and take their normal current. When the B voltage drops to normal the protective Globar resistor increases its resistance to about 500,000 ohms., so that it draws no appreciable current while the set is in use.

Because of its unique voltage characteristics, the Globar resistor cannot be tested with an ordinary ohmmeter, since it will show a resistance of several megohms.

I. F. Alignment

The I. F. trimmers are located on the top of the I. F. transformers which may be reached by removing the front cover. The modulated oscillator should be set to exactly 177.5 K.C. and connected from the 6-A-7 control grid to ground. Adjust the oscillator output to give about half-scale reading of the output meter. Adjust all three I. F. trimmers to give maximum output reading.

The first I. F. Transformer has a double trimmer consisting of a slotted screw for one trimmer and a hex nut around it for the other.

After the I. F. trimmers have been aligned once, go back and repeat the procedure, since any adjustment of one will affect the others to some extent.

R. F. Alignment

The gang condenser trimmers can be reached by removing the back cover. Connect a .00025 mfd mica condenser in series with the output of the test oscillator and the aerial lead of the receiver. Adjust the receiver to approximately 1400 K.C. and carefully tune the service oscillator to give maximum receiver output. Adjust the two trimmers nearest to the shaft end of the gang condenser to give maximum output meter reading. The trimmer on the other condenser section (oscillator section) should not be touched unless the set does not calibrate properly.

The low-frequency oscillator padding trimmer located on the side of the chassis does not require adjustment in most cases.

DATA SHEET

COURTESY
STEWART-WARNER-19
ALEMITE CORP. LTD.