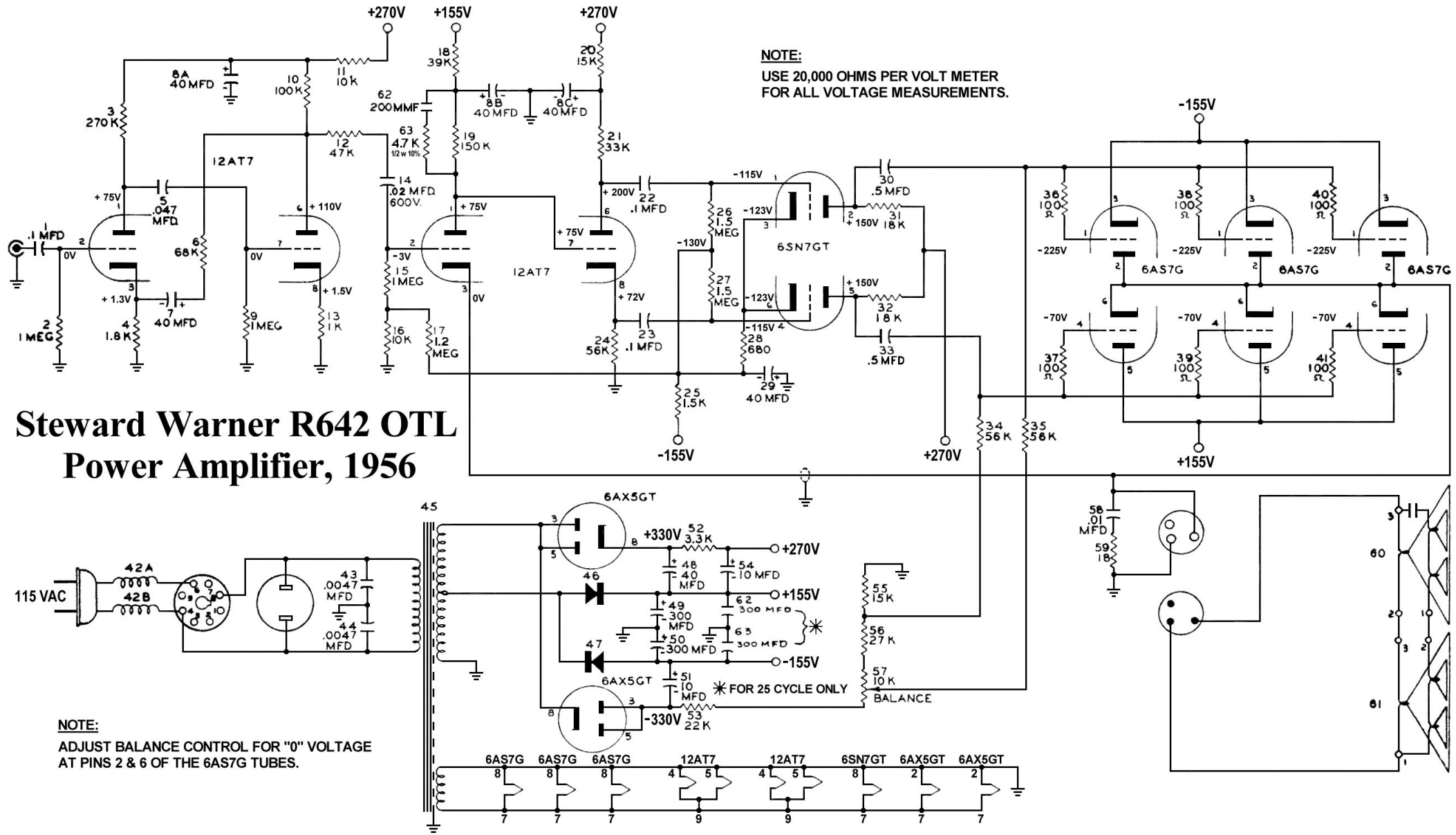Steward Warner R642 OTL Power Amplifier, 1956