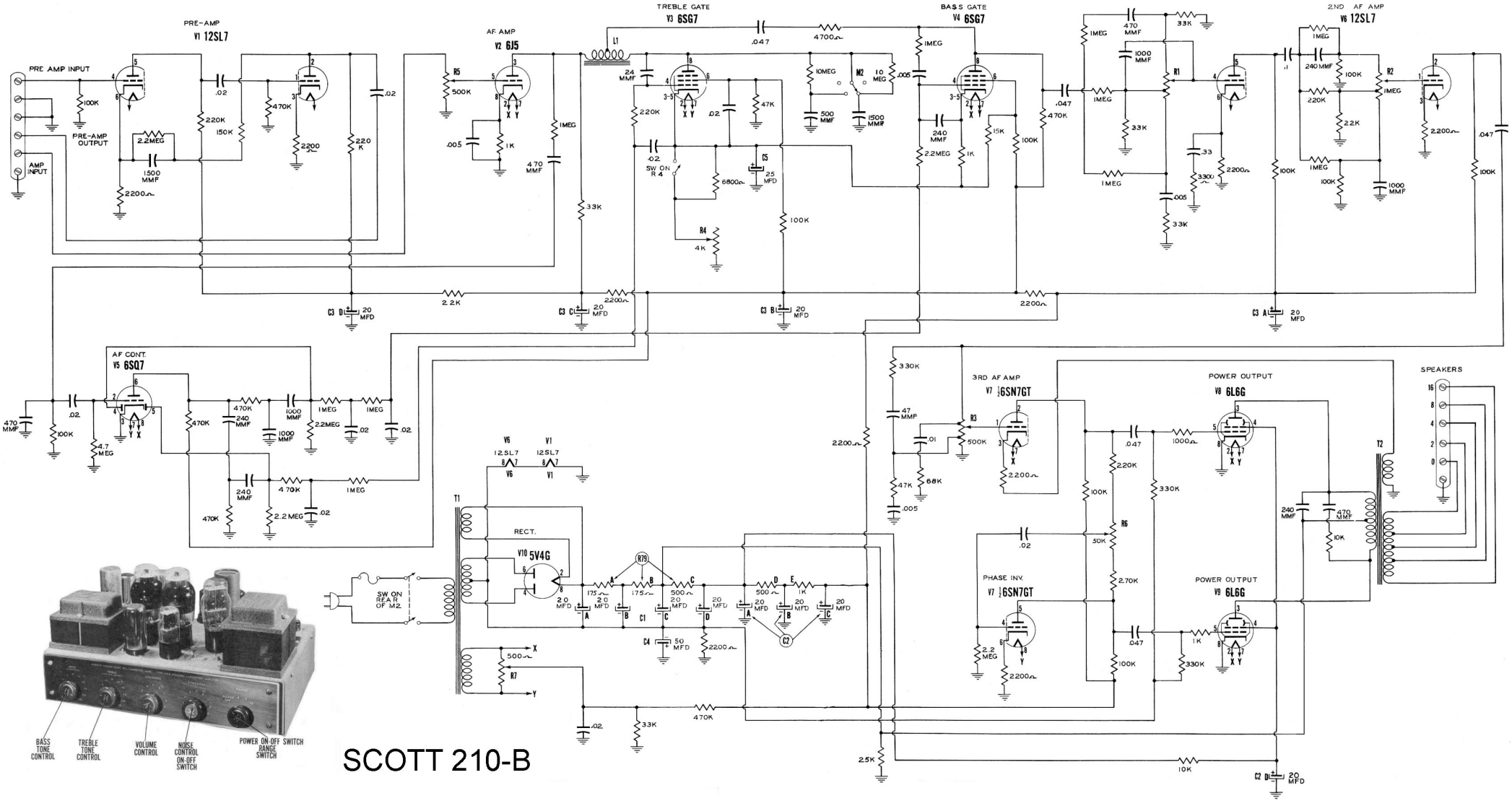
PRE AMP INPUT
PRE-AMP OUTPUT
AMP INPUT
PRE-AMP
V1 12SL7
AF AMP
V2 6J5
TREBLE GATE
V3 6SG7
BASS GATE
V4 6SG7
2ND AF AMP
V6 12SL7
AF CONT.
V5 6SQ7
3RD AF AMP
V7 ½6SN7GT
POWER OUTPUT
V8 6L6G
POWER OUTPUT
V9 6L6G
PHASE INV.
V7 ½6SN7GT
RECT.
V10 5V4G
SPEAKERS
SW ON REAR OF M2
SW ON R4
BASS TONE CONTROL
TREBLE TONE CONTROL
VOLUME CONTROL
NOISE CONTROL ON-OFF SWITCH
POWER ON-OFF SWITCH RANGE SWITCH

SCOTT 210-B