RCA VICTOR

MODEL BT-60

SIX-TUBE, TWO-BAND, BATTERY SUPERHETERODYNE RECEIVER

TECHNICAL INFORMATION AND SERVICE DATA

—1947 No. 10—

GENERAL SERVICE DIVISION • RCA VICTOR COMPANY LTD

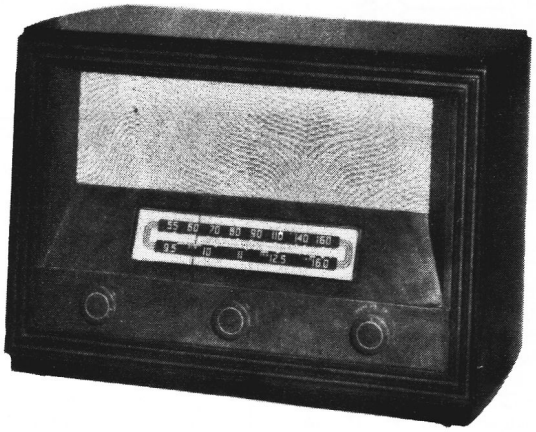

Electrical and Mechanical Specifications

FREQUENCY RANGES

Standard Broadcast—S.B.	540-1600 Kc.
Short Wave 31-25-19M	9.3-16.0 Mc.
Intermediate Frequency	455 Kc.

RADIOTRON COMPLEMENT

(1) Type 1T4	R.F. Amplifier
(2) Type 1R5	Converter
(3) Type 1T4	I.F. Amplifier
(4) Type 155	2nd Det., A.V.C. & 1st A.F.
(5) Type 1A5GT	A.F. Amplifier
(6) Type 1G6GT/G	Power Output

POWER OUTPUT

Undistorted	0.50 Watts
Maximum	0.58 Watts

LOUDSPEAKER

Type	4 x 6 elliptical P.M.
Voice coil impedance	3.4 ohms at 400 cycles

CABINET DIMENSIONS

Height	12¼ inches
Width	17¾ inches
Depth	11-5/16 inches

CURRENT CONSUMPTION

"A" at 1.4 volts	300 MA
"B" at 90 volts (minimum)	14 MA
(maximum)	26 MA

BATTERIES REQUIRED

Eveready battery pack number 758 or one 1.4 volt air cell or 1.5 volt dry cell and two 45 volt heavy duty. "B" batteries.

General Description

The BT-60 is a six-tube, two band superheterodyne receiver, housed in a table type cabinet of pleasing appearance. This receiver is designed to cover the standard broadcast band and the 31-25-19 meter short wave bands. Features of the design include:—Low-drain, high efficiency miniature tubes; Iron-core RF coils, Oscillator coils and I.F. transformers; Automatic volume control; Straight line dial; Phono input socket with PHONO position on range switch; Four by six inch dust-proof elliptical P.M. loudspeaker.

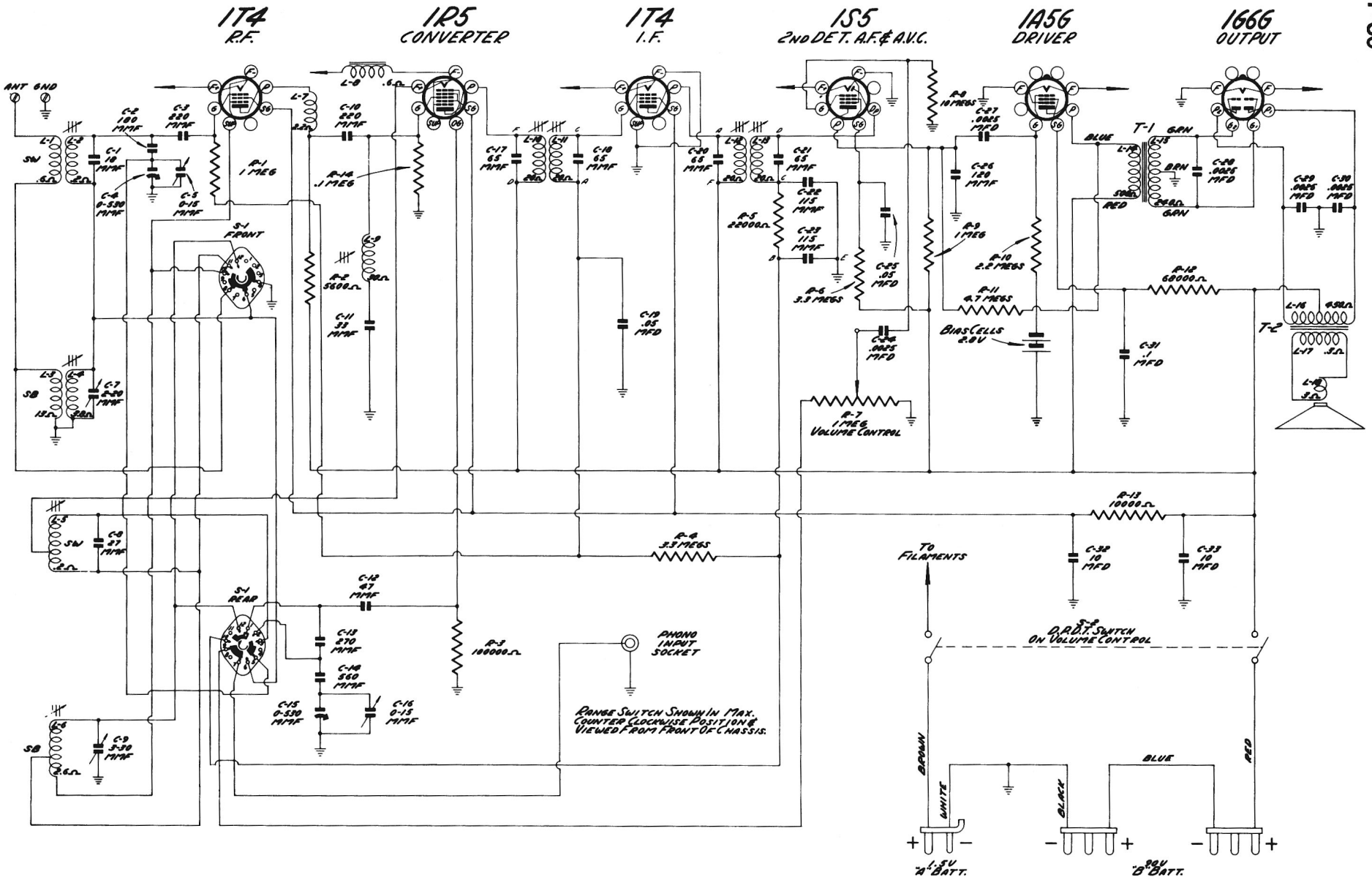

Fig. 1—Schematic Diagram—range switch shown in phono position

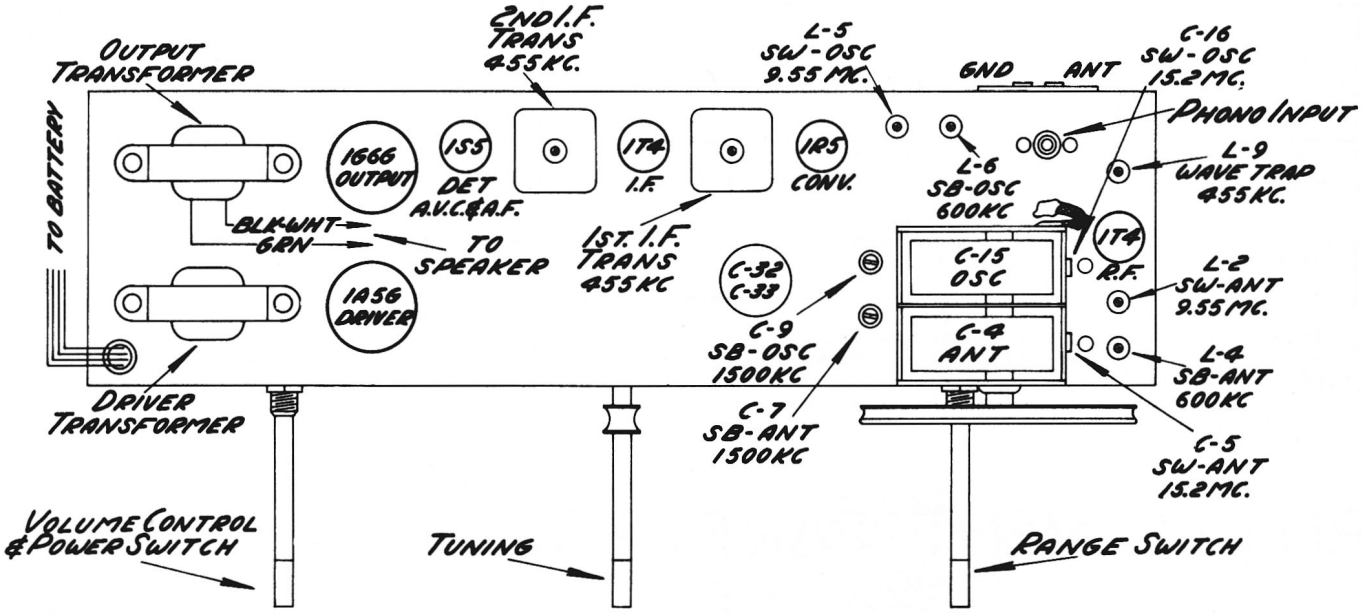

Fig. 2—Chassis Layout and Alignment Adjustments

ALIGNMENT PROCEDURE

Before aligning set, completely mesh the gang and set the dial pointer on the mechanical maximum calibration point at the extreme left hand end of the dial.

When making a complete alignment follow in proper sequence the tabulated form below.

If only a portion of the circuit is to be aligned select the portion required, followed by the remaining steps in the chart.

For "S.B." and 31-25-19M band alignment use output meter across voice coil keeping Test Oscillator output as low as possible to prevent AVC action.

Cathode-ray oscilloscope and sweep signal generator alignment of the 455 kc. A.M. I.F. transformers is the preferable method. Connect oscilloscope across the volume control. If the required equipment is not available use the method outlined below.

ALIGNMENT CHART

ORDER OF ALIGNMENT		TEST OSCILLATOR: CONNECT "HI" SIDE TO	TEST OSCILLATOR: CONNECT "LO" SIDE TO	TEST OSCILLATOR: DUMMY ANTENNA	TEST OSCILLATOR: FREQUENCY SETTING	RANGE SELECTOR	RECEIVER DIAL SETTING	CIRCUIT TO ADJUST	ADJUSTMENT SYMBOLS	NOTES
A.M. I.F. ALIGNMENT	1	1T4 1st I.F. Grid	Ground	.01 mfd.	455 KC 30% mod. 400 Cy.A.M.	S.B.	High Freq. end of Dial	2nd I.F. Trans.	L-12 and L-13	Adjust for max. Voltage across Voice Coil.
	2	1R5 Mixer Grid	Same	Same	Same	Same	Same	1st I.F. Trans.	L-10 and L-11	Same
	3	1T4 R.F. Grid	Same	Same	Same	Same	Same	Wave Trap	L-9	Adjust for min. Voltage across Voice Coil.
31-25-19M ALIGNMENT	4	"A" on Ant. Ter. Board	Ground	300 Ohms	9.55 MC 30% Mod. 400 Cy.A.M.	31-25-19M	9.55 MC Calibration point on dial.	Oscillator	L-5	
	5	Same	Same	Same	Same	Same	Same	Ant.	L-2	Same
	6	Same	Same	Same	15.2 MC 30% Mod. 400 Cy.A.M.	Same	15.2 MC Calibration point on dial.	Oscillator	C-16	Same
	7	Same	Same	Same	Same	Same	Same	Ant.	C-5	Same
	8	Repeat steps 4 to 7 for maximum output.								
		NOTE:- To guard against the possibility of alignment of L-5 and C-16 to image frequency, tune the test oscillator and receiver to 15.2 MC, then set test oscillator to 16.11 MC (image frequency). Increase the test oscillator output; A signal should be heard. Then tune test osc. and receiver to 9.55 MC. Reset test osc. to 10.46 MC (image frequency) and increase test osc. output; A signal should be heard. If these image frequencies cannot be heard, the receiver is incorrectly aligned. Therefore repeat steps 4 to 8.								
S.B. ALIGNMENT	9	"A" on Ant. Ter. Board	Ground	200 mmf.	600 KC 30% Mod. 400 Cy.A.M.	S.B.	600 KC Calibration point on dial.	Oscillator	L-6	Same
	10	Same	Same	Same	Same	Same	Same	Ant.	L-4	Same
	11	Same	Same	Same	1500 KC 30% Mod. 400 Cycles	Same	1500 KC Calibration point on dial	Oscillator	C-9	Same
	12	Same	Same	Same	Same	Same	Same	Ant.	C-7	Same
	13	Repeat steps 9 to 12 for max. output.								

RADIOTRON SOCKET VOLTAGES

TYPE	PLATE	SCREEN GRID	CONTROL GRID	OSC. GRID		FILAMENT
					FREQ.	
1T4 R.F.	82	51				1.4
1R5 Converter	90	51		3.6 7.2 2.5 4.3	600 kc. 1500 kc. 9.55 mc. 15.2 mc.	1.4
1T4 I.F.	90	51				1.4
1S5 2nd Det. & 1st A.F.	18	27				1.4
1A5GT, A.F. Amplifier	88	60	2.0			1.4
1G6GT/G Power Output	90 (Pin 3) 90 (Pin 6)					1.4

NOTE:—All the above values hold within plus or minus 20% when measured with an RCA voltohmyst or equivalent, with an "A" battery voltage of 1.4 volts and "B" battery voltage of 90 volts. All voltages are measured to chassis.

REPLACEMENT PARTS FOR MODEL BT-60

Insist on genuine factory tested parts, which are readily identified and may be purchased from authorized dealers.

STOCK NO.	DESCRIPTION	
	RECEIVER ASSEMBLIES	
12930	Board-Antenna Terminal Board.....	
S-4245	Capacitor-Trimmer Assembly(C7,C9).	
39041	Capacitor-18 Mmfd.Ceramic (C1)....	
48162	Capacitor-27 Mmfd.Ceramic (C8)....	
39616	Capacitor-33 Mmfd. Mica 10% (C11).	
39620	Capacitor-47 Mmfd. Mica 10% (C12).	
12724	Capacitor-120 Mmfd.Mica 20% (C26).	
39634	Capacitor-180 Mmfd.Mica 5% (C2)...	
39638	Capacitor-270 Mmfd. (C13).....	
39636	Capacitor-220 Mmfd. 10% (C3,C10)..	
39646	Capacitor-560 Mmfd. 5% (C14).....	
S-3644	Capacitor-.0025 Mfd.(C24,C27,C28, C29,C30).....	
S-3653	Capacitor-.05 Mfd. (C19,C25).....	
S-3655	Capacitor-.1 Mfd. (C31).....	
28114	Capacitor-Electrolytic 10-10 Mfd. (C32,C33).....	
S-3731	Condenser-Variable(C4,C5,C15,C16).	
S-4237	Coil-Antenna coil B.C. (L1,L2)....	
S-4238	Coil-Antenna coil S.W. (L3,L4)....	
S-4240	Coil-Oscillator coil Standard Broadcast (L5).....	
S-4241	Coil-Oscillator coil Short Wave (L6).....	
S-3098	Indicator-Station selector pointer	
30734	Resistor-5600 ohms 1/2 watt (R2)..	
3078	Resistor-10,000 ohms 1/2 watt(R13)	
30492	Resistor-22,000 ohms 1/2 watt (R5)	
14138	Resistor-68,000 ohms 1/2 watt (R12)	
3252	Resistor-100,000 ohms 1/2 watt (R3,R14).....	
30652	Resistor-1 Megohm 1/2 watt (R1,R9) 20%.....	
30649	Resistor-2.2 Megohm 1/2 watt (R10)	
31417	Resistor-3.3 Megohm 1/2 watt(R4, R6).....	
30931	Resistor-4.7 Megohm 1/2 watt(R11).	
30992	Resistor-10 Megohm 1/2 watt (R8)..	
S-4236	Switch-Range Switch (S1).....	
71037	Socket-Tube Socket (Moulded).....	
S-4202	Socket-Phono Socket.....	

STOCK NO.	DESCRIPTION	
S-4244	Scale-Dial Scale.....	
31319	Socket-Tube Socket (Octal).....	
36069	Socket-Tube Socket (Miniature with centre shield).....	
36500	Socket-Tube Socket (less centre shield).....	
S-4235	Shaft-Drive Shaft.....	
S-3526	Transformer-I.F.1st(L10,L11,C17,C18)	
S-3527	Transformer-I.F.2nd(L12,L13,C20,C21, C22,C23,R5).....	
S-4242	Transformer-Driver (T1)(L14,L15)...	
S-4239	Trap-Wave Trap (L9).....	
S-4234	Volume Control (R7,S2).....	
	SPEAKER ASSEMBLIES	
S-3556	Dust Cap (Pkg.3).....	
S-3867	Cone-Cone and Voice Coil Assy.(L18)	
S-3502	Speaker.....	
S-4243	Output Transformer (T2) (L16,L17)..	
	MISCELLANEOUS ASSEMBLIES	
31581	Cell-Bias cell.....	
S-4248	Cloth-Grille Cloth.....	
S-3383	Cord-Drive Cord.....	
31580	Cell-Bias Cell Holder.....	
S-4246	Cable-Battery Cable.....	
S-3510	Decal-.....	
35214	Knob-(Range).....	
35775	Knob-(Volume-tuning).....	
31418	Spring-Drive Cord Tension (Pkg.3).....	
S-2398	Plug-Battery Cable Plug "A".....	
12827	Plug-Battery Cable Plug "B".....	

All prices and parts are subject to change or withdrawal without notice.