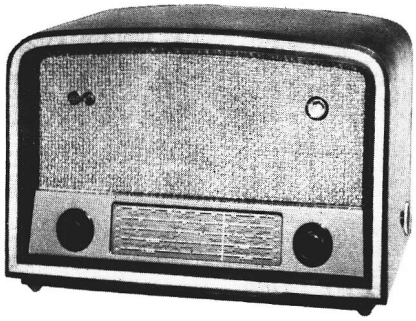

MODEL 9Q53

RCA VICTOR

"HIS MASTER'S VOICE"

MODEL 9Q53

SERVICE DATA

— 1949 NO. 7 —

GENERAL SERVICE DIVISION
RCA VICTOR COMPANY LIMITED
MONTREAL, QUE.

Electrical and Mechanical Specifications

Tuning Ranges

Standard Broadcast ("A" Band)	525-1600 kc (571-187 m)
Medium Wave ("B" Band)	2.3-7 mc (130-42.9 m)
Short Wave ("C" Band)	7-22 mc (42.9-13.6 m)
"31-25 Meter" Spread Band	9.5-12 mc (31.6-25 m)
"19-16 Meter" Spread Band	15.1-17.9 mc (19.8-16.7 m)

Intermediate Frequency ---------- 455 kc

Tube Complement

(1)	RCA 6BA6	R.F. Amplifier
(2)	RCA 6BE6	Converter
(3)	RCA 6SF7	I.F. Amp.—Det.—A.V.C.
(4)	RCA 6SC7	A.F. Amp.—Ph. Inverter
(5)	RCA 6F6G	Push-Pull Output
(6)	RCA 6F6G	
(7)	RCA 5Y3GT	Rectifier
(8)	RCA 6U5/6G5	Tuning Eye

Lamps

Dial Lamps (2)	Mazda Type 44, 6.3 volts, .25 amp.
Band Indicator Lamp	Mazda Type 47, 6.3 volts, .15 amp.

Power Supply Ratings

Voltage	105 to 125 volts
Frequency	25 & 60 Cycles
Watts	80

Loudspeaker

Type	8 in. PM Dynamic
Voice Coil Impedance	2.2 ohms at 400 cycles

Power Output Rating

Undistorted	5 watts
Maximum	5.75 watts

Tuning Drive Ratio ---------- 15½ : 1 (7¾ turns of knob)

Cabinet Dimensions

Height 13-15/16 in. Width 20 in.

Depth 10-11/16 in.

General Description

This instrument is an eight tube five-band receiver of conventional design with the exception of the spread-band tuning.

A three section gang condenser, one section each for antenna, r.f. and oscillator circuits, is used for the A, B and C bands. The 31-25 Meter and the 19-16 Meter spread-bands are tuned by a permeability tuning system using a rocker arm assembly which is actuated by a cam attached to the tuning condenser shaft. The core assembly of the permeability tuning system tunes both the 31-25 Meter and the 19-16 Meter bands with different circuit connections.

In the 31-25 Meter band position the 31-25 Meter coils are used. In the 19-16 Meter band position the 31-25 Meter and the 19-16 Meter band coils are used in parallel.

The inductances of the A-B-C windings of the multiple antenna coil are all fixed, but the inductances of all other coils in the antenna, r.f. and oscillator circuits are adjustable. Ungrounded screw type cores are used for these coils and adjustments are made with a non-metallic screwdriver.

A local-remote switch permits reduction of sensitivity on A band to prevent overloading on strong signals. On all other bands full sensitivity is used and the switch is not effective.

The tone control is continuous and is designed to function as a high or low frequency tone control when the control knob is turned to the right or to the left. The center position gives both high and low frequency response.

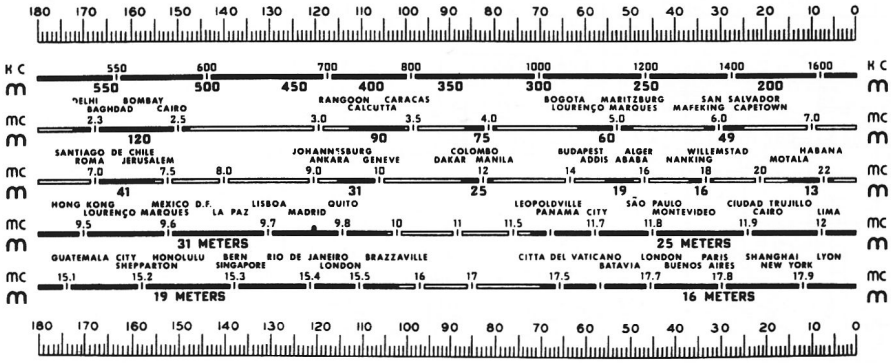

The corresponding position of the dial indicator for any setting of the calibration scale can be determined by drawing a line from this point on the bottom calibration scale to the same point on the top calibration scale. For example: 143° on the calibration scale corresponds to approximately 600 kc on "A" band, etc. Read instructions under "Alignment Procedures."

Reduced Reproduction of Receiver Dial and Corresponding 0-180° Calibration Scales

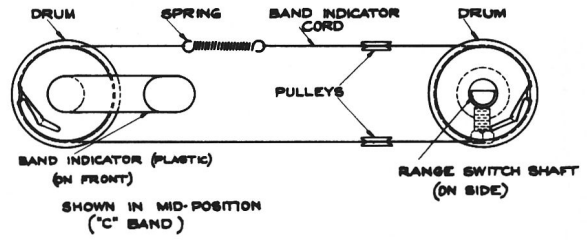

Fig. 1—Dial Indicator and Drive Mechanism

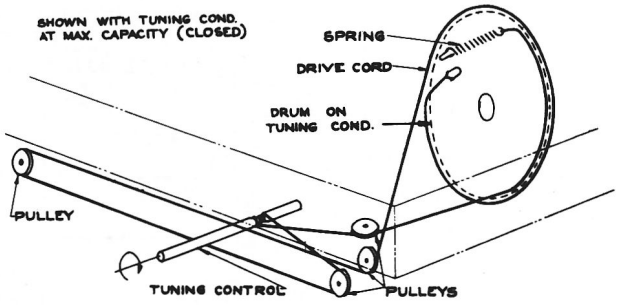

Fig. 2—Dial Cord Stringing

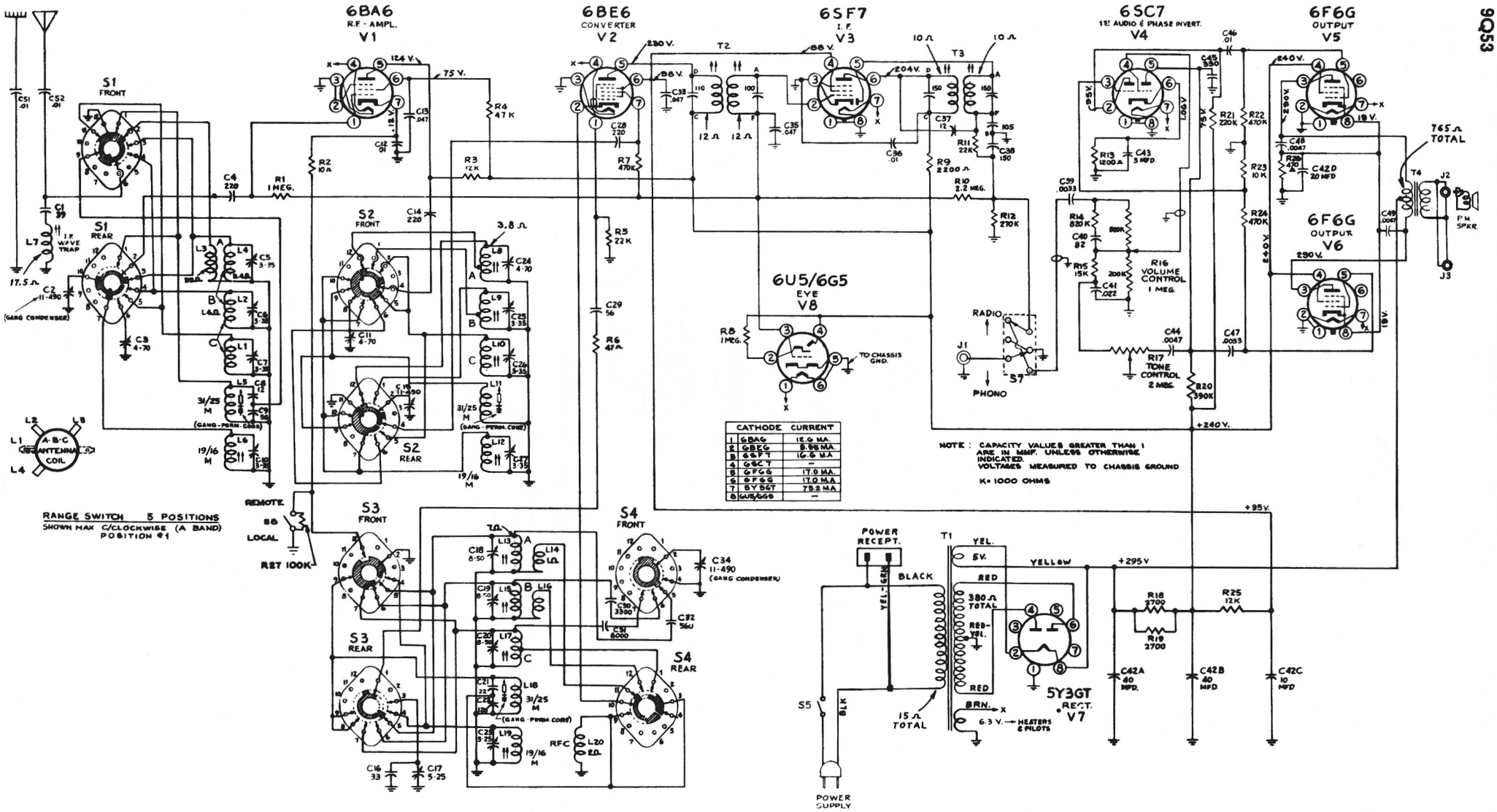

CATHODE CURRENT		
1	6BA6	12.6 MA.
2	6BE6	8.95 MA.
3	6SF7	16.6 MA.
4	6SC7	--
5	6F6G	17.0 MA.
6	6F6G	17.0 MA.
7	5Y3GT	75.2 MA.
8	6U5/6G5	--

Fig. 3—Schematic Diagram

Alignment Procedure and Chart

Test-Oscillator.—For all alignment operations, connect the low side of the test-oscillator to the receiver chassis, and keep the oscillator output as low as possible to avoid a-v-c action.

Calibration Scale on Indicator-Drive-Cord Drum.—The tuning dial is fastened in the cabinet and cannot be used for reference during alignment, therefore a calibration scale is attached to the indicator-drive-cord drum which is mounted on the shaft of the gang condenser. The setting of the gang condenser is read on this scale, which is calibrated in degrees.

As the first step in r-f alignment, check the position of the drum. The "180°" mark on the drum scale must be vertical and directly over the center of the gang-condenser shaft when the plates are fully meshed. The drum is held to the shaft by means of two set screws, which must be tightened securely when the drum is in the correct position.

Pointer for Calibration Scale.—Improvise a pointer for the calibration scale by fastening a piece of wire to the gang-condenser frame, and bend the wire so that it points to the "180°" mark on the calibration scale when the plates are fully meshed. The correct setting of the gang in degrees, for each alignment frequency, is given in the alignment table.

Receiver Dial with Calibration Scale.—To determine the corresponding frequency for any setting of the calibration scales, refer to the dial with calibration scale drawing.

Dial-Indicator Adjustment.—After fastening the chassis in the cabinet, attach the dial indicator to the drive cable with indicator at the end calibration mark, and gang condenser fully meshed. The indicator has a clip for attachment to the cable.

Spread-Band Alignment.—For spread-band alignment an extremely high degree of accuracy is required of the test-oscillator, as a slight error will produce considerable inaccuracy on the spread-band dials.

Determine the exact dial settings of the test-oscillator (for frequencies at or close to the specified alignment frequencies) by one of the following methods:

1. Zero-beat the test-oscillator against short-wave stations of known frequency.
2. Check test-oscillator signals with a crystal controlled oscillator.

A final check should be made on actual reception of short-wave stations of known frequency.

Order of Alignment		TEST OSCILLATOR				RECEIVER				
		Connect "HI" Side To	Connect "LO" Side To	Dummy Antenna	Frequency Setting	Range Selector	Receiver Dial Setting	Circuit to Adjust	Adjustment Symbols	Notes
I.F. ALIGNMENT	1	Pin #7 6SF7	Gnd	.01 Mfd	455 Kc	Band "A"	600 Kc	2nd I.F.Trans.	T-3 Top & Bottom	Max. Out.
	2	Pin #7 6BE6	Same	Same	Same	Same	Same	1st I.F.Trans.	T-2 Top & Bottom	Same
"A" BAND ALIGNMENT	3	"Ant" Terminal	Same	200 Mmf	1400 Kc	Same	27.3°	Osc. RF Ant.	C-18 C-24 C-5	Same
	4	Same	Same	Same	600 Kc	Same	142.6°	Osc. RF	L-13 L-8	Same
	5	Repeat Steps 3 & 4.								
	6	Same	Same	Same	455 Kc	Same	142.°	Wavetrap	L-7	Minimum Output
"B" BAND ALIGNMENT	7	Same	Same	300 Ohm Resistor	6.1 Mc	Band "B"	28.2°	Osc. RF Ant.	C-19 C-25 C-6	Max. Out.
	8	Same	Same	Same	2.5 Mc	Same	148.9°	Osc. RF	L-15 L-9	Same
	9	Repeat Steps 7 & 8.								
"C" BAND ALIGNMENT	10	Same	Same	Same	17.75 Mc	Band "C"	34.4°	Osc. RF Ant.	†C-20 C-26 C-7	Max. Out.
	11	Same	Same	Same	7.2 Mc	Same	160.3°	Osc. RF	L-17 L-10	Same
	12	Repeat Steps 10 & 11.								
"31-25M" BAND ALIGNMENT	13	Same	Same	Same	9.5 Mc	31-25 Meter Band	169.6°	Osc. RF Ant.	*C-17 *C-11 *C-3	Same
	14	Same	Same	Same	11.8 Mc	31-25 Meter Band	44.8°	Osc. RF Ant.	‡L-18 ‡L-11 ‡L-5	Same
	15	Repeat Steps 13 & 14.								
"19-16M" BAND ALIGNMENT	16	Same	Same	Same	17.75 Mc	19-16 Meter Band	37.5°	Osc. RF Ant.	†C-23 C-27 C-10	Same
	17	Same	Same	Same	15.2 Mc	19-16 Meter Band	157.2°	Osc. RF Ant.	†L-19 L-12 L-6	Same
	18	Repeat Steps 16 & 17.								

† Oscillator frequency is higher than signal frequency on all bands. Use minimum capacity or minimum inductance peak on oscillator adjustments if two peaks can be obtained.

* Pre-set L18, L11 and L5, with tuning condenser at minimum capacity (0°), so that the cores are exactly 1/8 in. (3.175 mm) from the bottom end of their respective coils (coil end to bottom end of iron core—not the insulating rod of the core assembly).

‡ If dial reading for maximum output at 11.8 mc is lower than 11.8 mc, rotate studs approx. 1/2 turn clockwise—if higher rotate approx. 1/2 turn counterclockwise.

Critical Lead Dress

1. Capacitor C37 should be soldered across the 2nd I.F. transformer lugs D and F with the shortest possible leads and away from chassis.
2. Pins No. 1 and No. 3 of the 6SF7 tube should be connected together with a bus wire; pins No. 1 and No. 3 are separately grounded to chassis.
3. Range switch shield should be grounded to the chassis on the side where the 31-25 meter band ant. coil L5 and R.F. coil L11 are located.
4. The leads to the extra speaker jack J3 should be twisted and dressed down to the chassis.
5. Capacitor C39 should be dressed between the Radio-Phono switch S7 and the chassis.
6. Resistors R13 and R23 should be grounded to a common point, nearest to the ground point of capacitor C43.
7. The lead connecting C10 to the range switch should be dressed down to the chassis and then vertically up to the proper terminal of the range switch.
8. Dress all unshielded leads and components away from pins No. 3 and 4 of the 6SC7 tube.

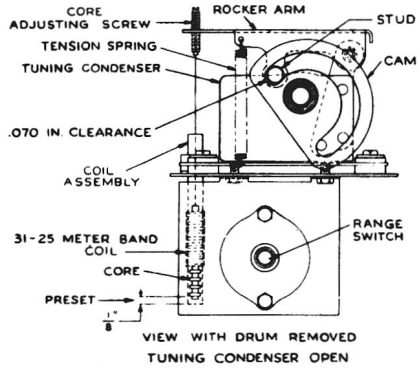

Fig. 4—Spread-Band Tuning (Front View)

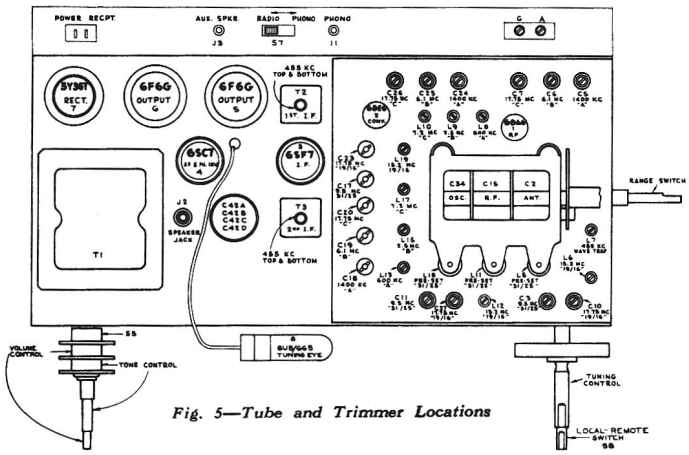

Fig. 5—Tube and Trimmer Locations

REPLACEMENT PARTS FOR MODEL 9Q53

Insist on genuine factory tested parts, which are readily identified and may be purchased from authorized dealers.

Stock No.	Description	List Price
	R.F. CHASSIS ASSEMBLIES	
S-4700	Capacitor - trimmer - two section 3-35 MMF. plus 4 minus 70 MMF (C3-C10-C11-C27)	
S-4451	Capacitor - trimmer - two sections 3-35 MMF. one section 4-75 MMF (C24-C25-C26)	
S-4701	Capacitor - trimmer - three sections of 3-35 MMF. (C5-C6-C7)	
S-4702	Capacitor - trimmer - three sections of 8-50 MMF & two sections 5-25 MMF. (C17-C18-C19-C20-C23)	
S-4703	Capacitor - ceramic - 12 MMF (C8)	
S-4518	Capacitor - ceramic - 22 MMF (C21)	
S-4704	Capacitor - ceramic - 33 MMF (C16)	
S-4705	Capacitor - ceramic - 39 MMF (C1)	
S-4899	Capacitor - ceramic - 56 MMF (C9)	
S-4900	Capacitor - ceramic - 56 MMF (C29)	
S-4521	Capacitor - ceramic -120 MMF (C22)	
S-4439	Capacitor - mica - 220 MMF (C4-C14-C28)	
S-4440	Capacitor - mica - 560 MMF (C32)	
S-4441	Capacitor - mica - 3300 MMF (C30)	
S-4442	Capacitor - mica - 6000 MMF (C31)	
	Capacitor - .01 Mfd. 400 V. 20% (C12)	
	Capacitor - .047 Mfd. 400V. 20% (C13-C33)	
S-4713	Condenser - Variable (C2-C15-C34)	
S-4524	Coil - cathode choke coil (L20)	
S-4525	Coil - oscillator "A" band with core & stud (L13-L14)	
S-4526	Coil - oscillator "B" band with core & stud (L15-L16)	
S-4527	Coil - oscillator "C" band with core & stud (L17)	
S-4528	Coil - ant. osc.; or R.F. coil (31-25 meter) (L5-L11-L18)	
S-4529	Coil - ant.; osc.; or R.F. coil (19-16 meter) (L6-L12-L19)	
S-4707	Coil - R.F. coil "A" band with core & stud (L8)	
S-4708	Coil - R.F. coil "B" band with core & stud (L9)	
S-4709	Coil - R.F. coil "C" band with core & stud (L10)	
S-4710	Coil - wave trap with core & stud (L7)	
	Resistor 10 ohms ½ watt 20% (R2)	
	" 47 " " " " (R6)	
	" 12,000 ohms 2 watt 10% (R3)	
	" 22,000 " ½ " 20% (R5)	
	" 47,000 " 1 " 20% (R4)	
	" 470,000 " ½ " 20% (R7)	
	" 1 Megohm ½ " 20% (R1)	
S-4720	Socket - tube socket for R.F. amp.	
S-4721	" - " " " converter	
S-4722	Switch - range switch (S1-S2-S3-S4)	
	MAIN CHASSIS ASSEMBLY	
S-4726	Capacitor - mica 12 MMF. 10% (C37)	
S-4727	" - " 82 " 10% (C40)	
S-4728	" - " 150 " 20% (C38)	
S-4729	" - " 330 " 20% (C45)	
	" - .003 Mfd. 600 V. 10% (C39-C47)	
	" - .004 " 600 V. 20% (C44)	
	" - .004 " 1000 V. 10% (C48-C49)	
	" - .01 " 400 V. 20% (C36-C46)	
S-4820	" - .01 " ceramic 500 V. (C51)	
	" - .01 " 600 V. 20% (C52)	
	" - .02 " 400 V. 10% (C41)	
	" - .04 " 200 V. 20% (C35)	
S-4612	" - Electrolytic 5 Mfd. 50 V. (C43)	
S-4733	" - " 40 Mfd. 450 V. (2) 10 Mfd. 300 V. (1) 20 Mfd. 50 volts (1) (C42A-C42B-C42C-C42D)	
S-4546	Coil - antenna coil - A-B-C bands (L1-L2-L3-L4)	
S-4739	Indicator - band indicator (plastic)	
S-4757	" - station selector pointer	
	Resistor - 470 ohms 2 watt 10% (R26)	
	" - 1200 " ½ " 10% (R13)	
	" - 2200 " ½ " 20% (R9)	
	" - 2700 " ½ " 10% (R18-R19)	

Stock No.	Description	List Price
	MAIN CHASSIS ASSEMBLY (Cont'd.)	
	Resistor - 10,000 ohms ½ watt 10% (R23)	
	" - 12,000 " 2 " 10% (R25)	
	" - 15,000 " ½ " 10% (R15)	
	" - 22,000 " ½ " 20% (R11)	
	" - 100,000 " ½ " 20% (R27)	
	" - 220,000 " ½ " 20% (R21)	
	" - 270,000 " ½ " 10% (R12)	
	" - 390,000 " ½ " 10% (R20)	
	" - 470,000 " ½ " 10% (R22)	
	" - 470,000 " ½ " 20% (R24)	
	" - 820,000 " ½ " 10% (R14)	
	" - 2.2 Megohms ½ " 20% (R10)	
S-4742	Socket - tube socket (octal)	
S-4904	Switch - radio phono switch (S7)	
S-4743	Switch - local remote switch (S8)	
S-4539	Transformer 1st I.F. (T2)	
S-4571	" 2nd I.F. (T3)	
S-3591	" -power 60 cycles (T1)	
S-3592	" - " 25 " (T1)	
S-4735	Volume Control & power switch (R16-R17-S5)	
	SPEAKER ASSEMBLY	
13867	Dust Cap (Pkg. 5)	
S-4748	Cone - cone & voice coil assy	
S-4491	Plug - pin plug for connecting cable	
S-4744	Output transformer (T4)	
	MISCELLANEOUS ASSEMBLIES	
S-4902	Board - antenna & ground terminal bd.	
S-4723	Bracket - dial cord bracket & pulley (L.H.)	
S-4724	" - " " " " pulleys (R.H.)	
S-4750	Baffle - baffle board & grille cloth assy	
S-4751	Bezel - dial bezel	
S-4725	Cable - tuning eye cable & socket with resistor	
S-4752	Clip - dial cover retaining clip (Pkg. 3)	
S-4753	Cover - back cover for cabinet	
S-4754	Cover - plastic dial cover	
S-4711	Core - adjustable core & stud for 31-25 meter band antenna or RF coils	
S-4712	Core - adjustable core & stud for 31-25 meter band osc. coil	
S-4734	Collar - band indicator retaining collar	
S-4736	Cord - dial cord	
S-4313	Cord - band indicator cord	
S-4548	Cord - power cord	
S-4755	Dial - glass dial scale	
S-4737	Drum - band indicator drum	
S-4738	Drum - band indicator driving drum	
S-4714	Drum - tuning condenser drum, hub & cam assy.	
S-4901	Grommet - to mount tuning condenser (Pkg. 3)	
S-4905	" - to mount speaker (Pkg. 4)	
S-4500	Emblem "RCA Victor"	
S-4756	Foot, rubber foot for cabinet (Pkg. 4)	
S-4758	Knob - local - remote switch knob	
S-4759	" - tuning control knob	
S-4760	" - volume " "	
S-4762	" - range switch knob	
S-4761	" - tone control knob	
11891	Lamp - dial lamp (Mazda 44)	
31480	" - band indicator lamp (Mazda 47)	
S-4763	Plate - dial back plate	
S-4715	Plate - rocker arm plate & stud assy (less cores)	
S-4740	Receptacle - A.C. outlet	
S-4595	Shield - dial lamp shield	
S-4511	Spacer - for speaker mounting (Pkg. 4)	
S-4741	Socket - dial lamp socket & lead	
S-4480	" - phono or speaker socket	
S-4903	Spring - dial cord tension (Pkg. 3)	
S-4536	Screw - rocker arm plate bearing screw (Pkg. 2)	
S-4537	Spring - " " " tension spring	
S-4746	Washer "C" washer to retain fly wheel & tuning shaft (Pkg. 3)	
S-4747	Wheel - flywheel & tuning shaft	

All prices and parts are subject to change or withdrawal without notice.