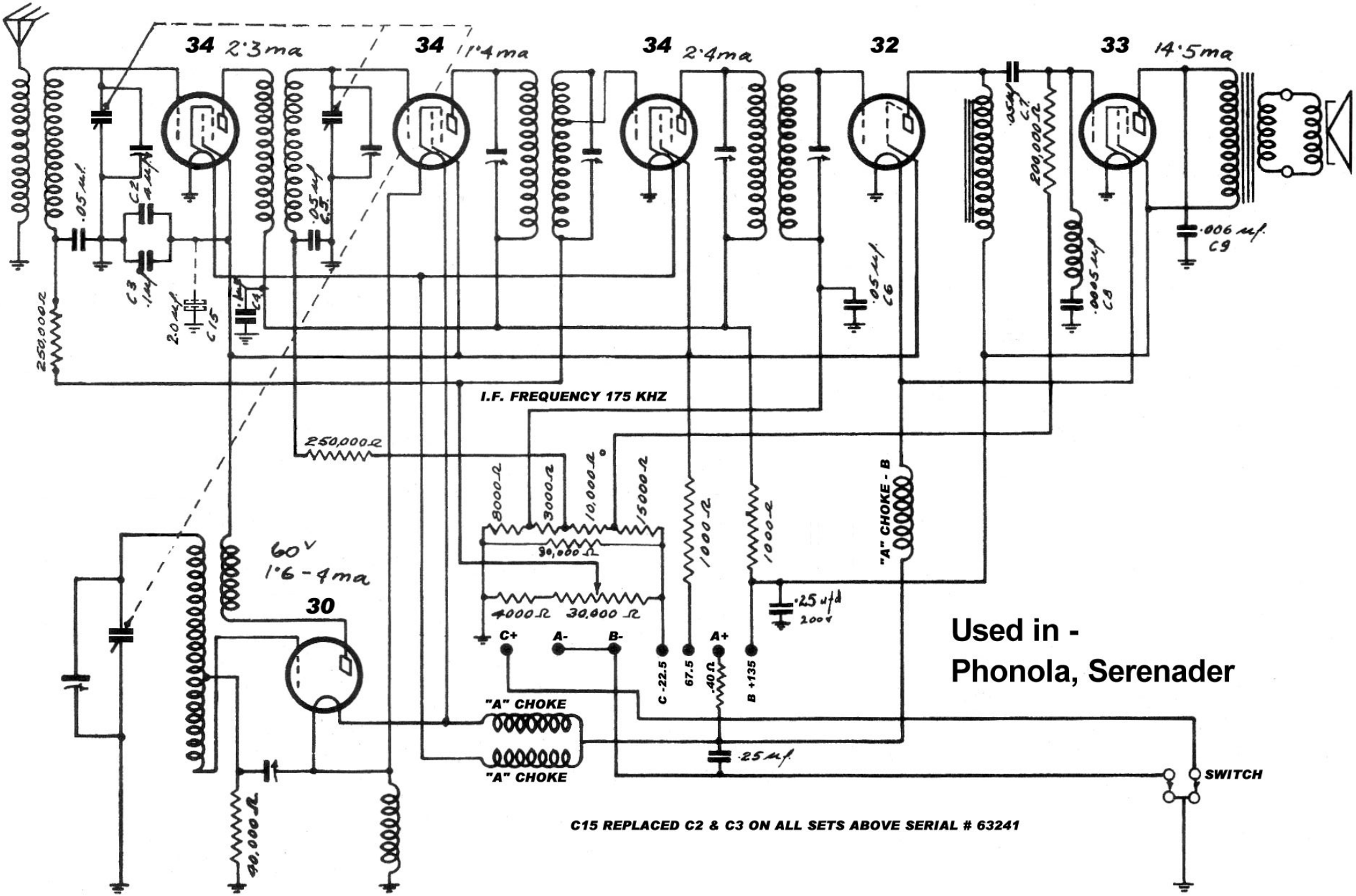

Used in -
Phonola, Serenader

Phonola - Electrohome 2B63-4 Battery Operated Radio

RCC - Phonola Data Sheet 5 (Bottom) - 1932-33