777

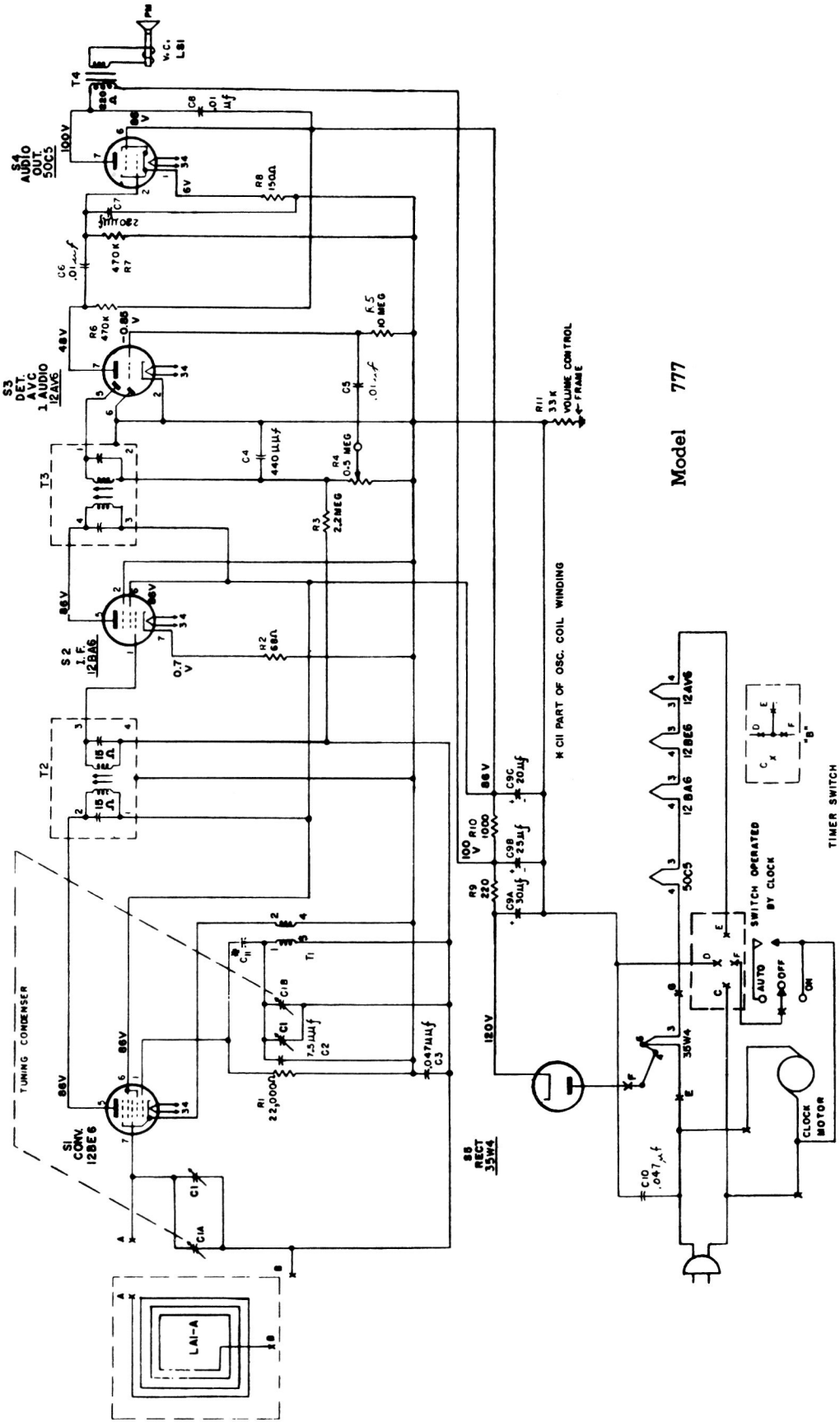
S4 AUDIO OUT. 50C5
S3 DET. AVC 1 AUDIO 12AV6
S2 I.F. 12BA6
S1 CONV. 12BE6
S5 RECT 35W4
T4
T3
T2
T1
V.C. LS1
TUNING CONDENSER
LA1-A
VOLUME CONTROL FRAME
* C11 PART OF OSC. COIL WINDING
SWITCH OPERATED BY CLOCK
TIMER SWITCH
CLOCK MOTOR
AUTO
OFF
ON
12AV6
12BE6
12BA6
50C5
35W4
Model 777