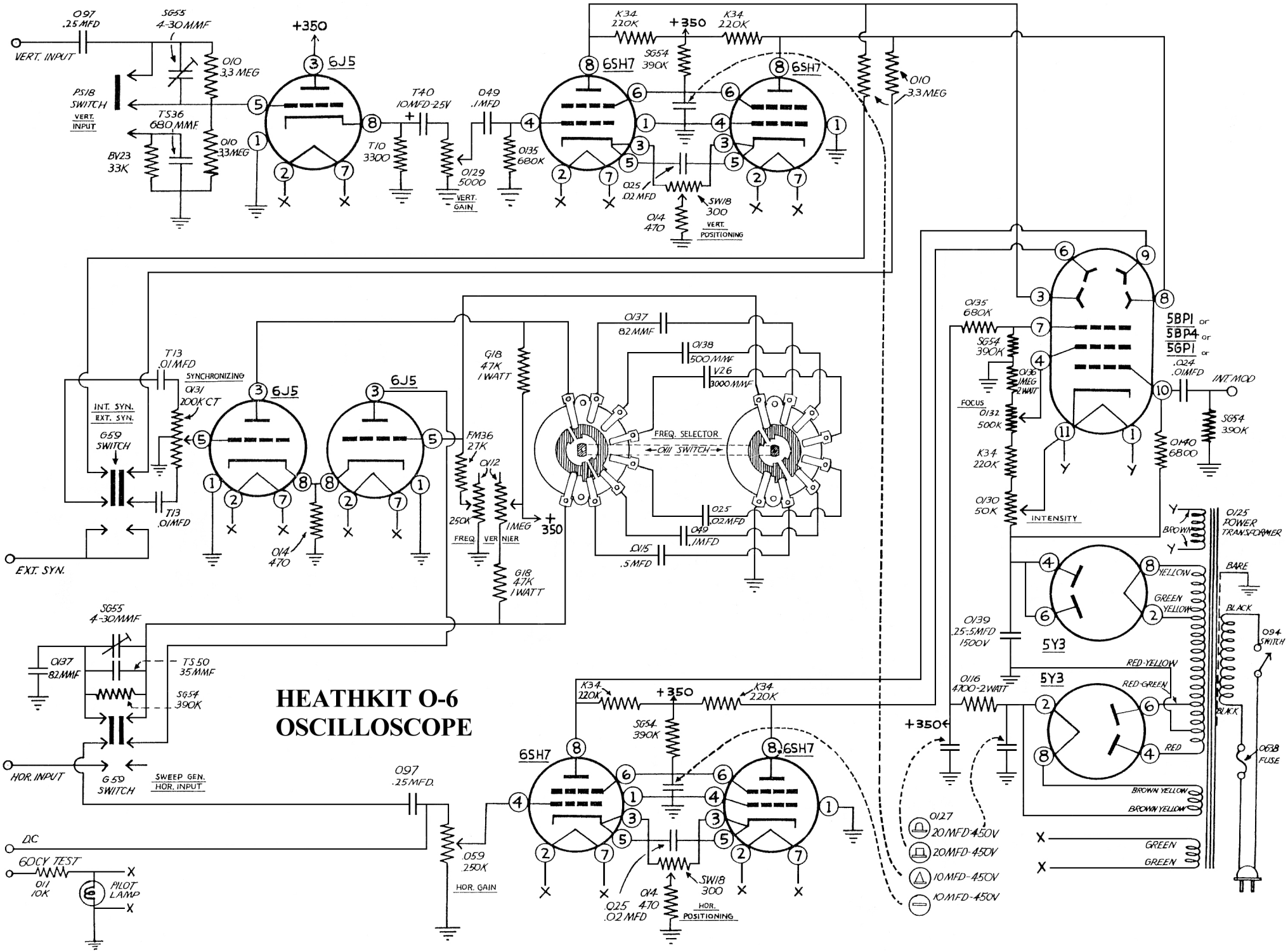
HEATHKIT O-6
OSCILLOSCOPE
VERT. INPUT
PS18 SWITCH
VERT. INPUT
TS36 680 MMF
BV23 33K
SG55 4-30 MMF
O10 3.3 MEG
+350
6J5
T40 10MFD-25V
T10 3300
O49 .1MFD
O129 5000
VERT. GAIN
O135 680K
6SH7
K34 220K
SG54 390K
O25 .02 MFD
O14 470
SW18 300
VERT. POSITIONING
O10 3.3 MEG
T13 .01MFD
SYNCHRONIZING
O131 200K CT
INT. SYN.
EXT. SYN.
G59 SWITCH
EXT. SYN.
O14 470
G18 47K 1 WATT
FM36 27K
O112
250K
1MEG
FREQ. VERNIER
G18 47K 1 WATT
O137 82 MMF
O138 500 MMF
V26 3000 MMF
FREQ. SELECTOR
O111 SWITCH
O25 .02 MFD
O49 .1MFD
O115 .5MFD
SG55 4-30 MMF
O137 82 MMF
TS50 35 MMF
SG54 390K
HOR. INPUT
G59 SWITCH
SWEEP GEN. HOR. INPUT
O97 .25 MFD.
DC
60CY TEST
O11 10K
PILOT LAMP
O59 250K
HOR. GAIN
K34 220K
SG54 390K
SW18 300
HOR. POSITIONING
O14 470
O25 .02 MFD
O135 680K
SG54 390K
O136 1MEG 2 WATT
FOCUS
O132 500K
K34 220K
O130 50K
INTENSITY
5BP1 or 5BP4 or 5GP1 or
O24 .01MFD
INT. MOD
SG54 390K
O140 6800
O125 POWER TRANSFORMER
BROWN
BARE
YELLOW
GREEN YELLOW
BLACK
O94 SWITCH
O139 .25-.5MFD 1500V
5Y3
RED-YELLOW
RED-GREEN
O116 4700-2 WATT
RED
BROWN YELLOW
BROWN YELLOW
O638 FUSE
GREEN
GREEN
O127
20MFD-450V
20MFD-450V
10MFD-450V
10MFD-450V