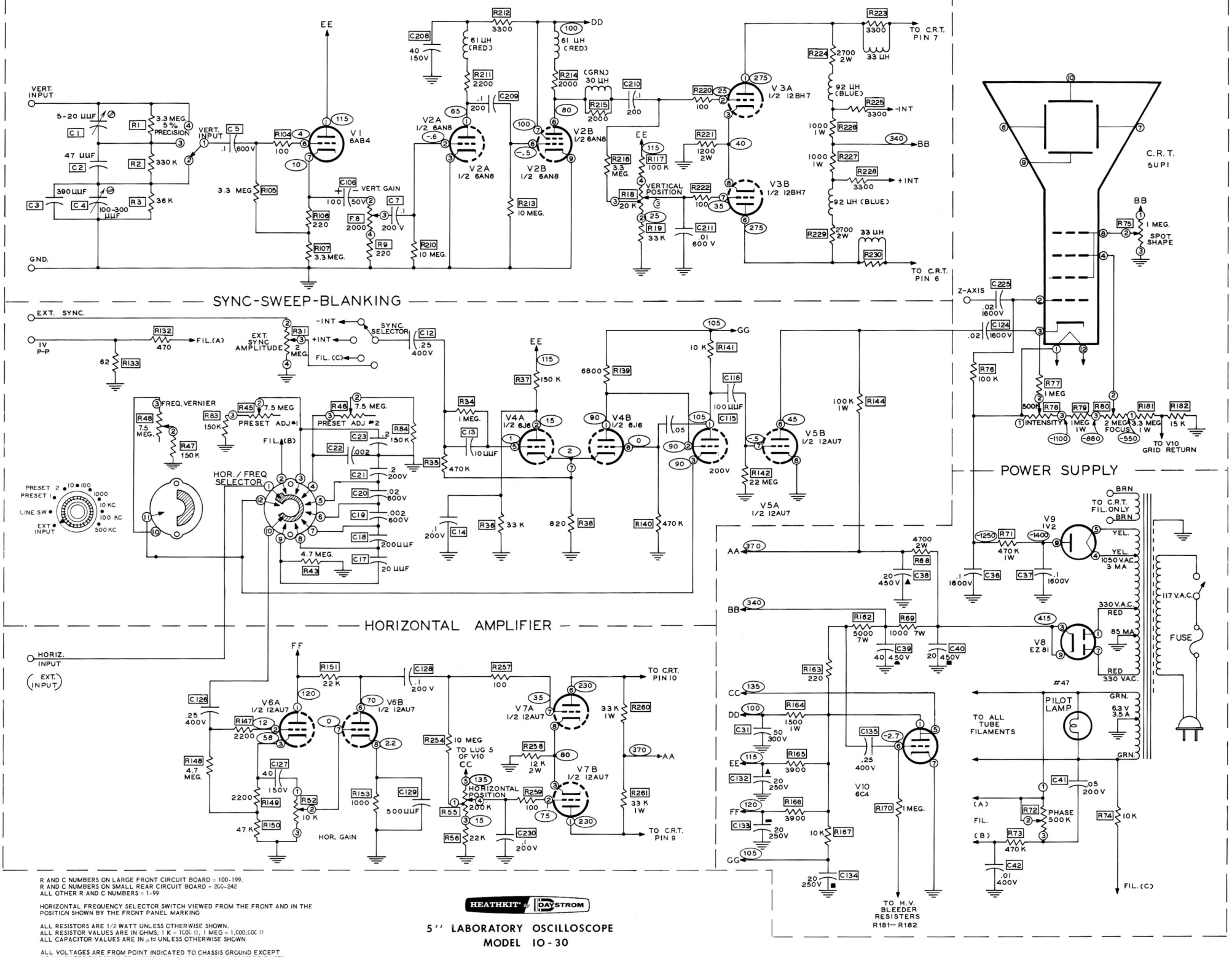

R AND C NUMBERS ON LARGE FRONT CIRCUIT BOARD = 100-199.
R AND C NUMBERS ON SMALL REAR CIRCUIT BOARD = 200-242
ALL OTHER R AND C NUMBERS = 1-99

HORIZONTAL FREQUENCY SELECTOR SWITCH VIEWED FROM THE FRONT AND IN THE POSITION SHOWN BY THE FRONT PANEL MARKING

ALL RESISTORS ARE 1/2 WATT UNLESS OTHERWISE SHOWN.
ALL RESISTOR VALUES ARE IN OHMS, 1 K = 1000 Ω, 1 MEG = 1,000,000 Ω
ALL CAPACITOR VALUES ARE IN μfd UNLESS OTHERWISE SHOWN.

ALL VOLTAGES ARE FROM POINT INDICATED TO CHASSIS GROUND EXCEPT AC VOLTAGES ON POWER TRANSFORMER WINDINGS. READINGS WERE TAKEN WITH AN 11 MEGOHM INPUT VTVM.

HEATHKIT by DAYSTROM

5'' LABORATORY OSCILLOSCOPE
MODEL 10-30