"Fade-Ometer"—

A NEW INSTRUMENT FOR SERVICEMEN

Essentially, the device here described is a special type of continuity checker, employing an electronic "eye" tube as the indicator of fading in defective radio parts. Also, this new device may be used as a V.T. voltmeter and output indicator.

PAUL R. DUNLAP

THERE has been a number of attempts in the past to solve the "intermittent" problem but all have failed in one way or another.

Somewhat popular has been the stage-by-stage method of analysis employed by such instruments as the Vacuum-Tube Voltmeter, Cathode Ray Oscilloscope, and the Stage Analyzers. These instruments are useful in radio servicing but fail to solve the intermittent problem as they *do not* test the *actual part* that is defective. Furthermore, they are limited in their use in that they must be operated in conjunction with a local signal generator, especially when testing audio channels. It is a known fact that most intermittent sets *will not fade* when operating on a steady oscillator signal but *will fade* when tuned to a broadcast signal. It follows that the only successful method of testing intermittent sets is to test them under absolutely normal operating conditions on a broadcast signal.

Due to the limitations of ordinary service equipment to meet the problem many Servicemen have resorted to the questionable method of assuming the trouble to be the usual intermittent condenser and recommending to the customer that *all* the condensers in the radio set be replaced. Many times after such guess-work the Serviceman receives a call from the customer complaining that the radio receiver is as bad or worse than before.

Intelligent use of the "Fade-Ometer" described here will save the Serviceman much time and worry. A thorough understanding of its functions and possibilities will enable him to get the most from the instrument.

BASIC THEORY

The test leads of this new instrument when inserted in the CAPACITY jack are part of a high-frequency R.F. oscillator circuit of special design. Oscillation in the circuit depends upon closing of the circuit by touching the prods together or to the terminals of a condenser. Opening of the circuit stops oscillation completely. A diode rectifier is coupled to the oscillator circuit to rectify part of the oscillator voltage. The resultant rectified D.C. voltage is then fed to the grid of an electronic "eye" tube for visual indication. In this way closing of the test lead circuit results in oscillation, rectification, and the closing of the "eye". Opening the test lead circuit stops oscillation and the "eye" opens.

Due to the fact that condensers have very low impedance or reactance to high-frequency currents, and resistors and inductances have comparatively higher reactance to the same high-frequency current, it is possible to supply a voltage of such frequency and impedance to a circuit composed of a condenser, re-

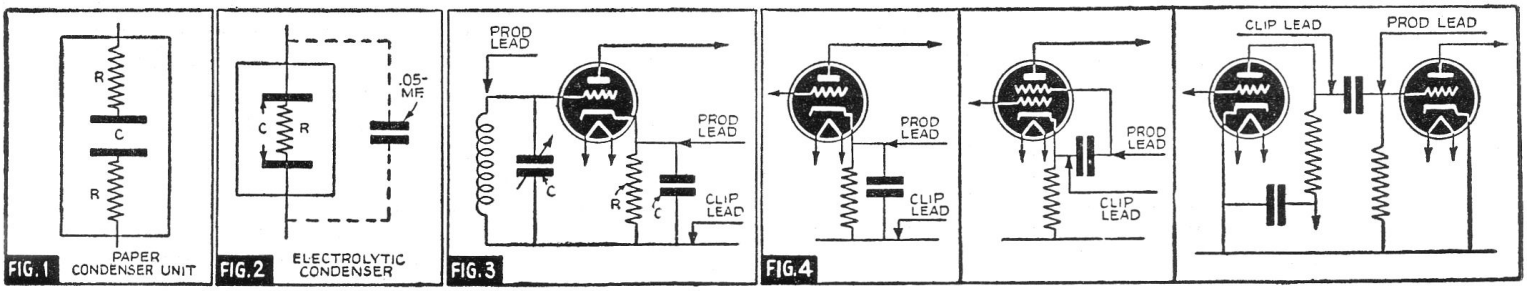

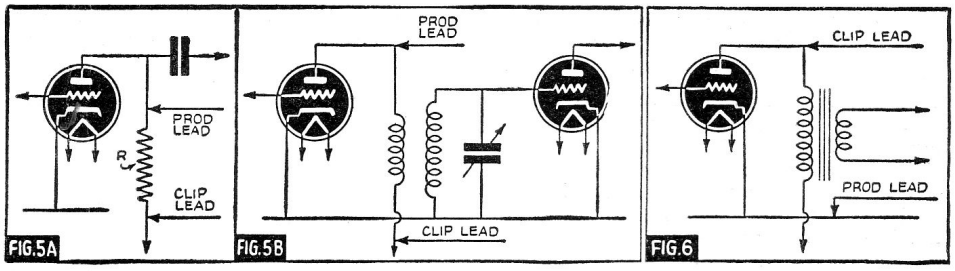

"FADE-OMETER" A NEW INSTRUMENT FOR SERVICEMEN

sistor, and inductance in parallel so that the current will pass through the condenser and not through the resistor or inductance. See Fig. 3. The high-frequency current follows the path of least resistance which is through the condenser. A resistance or inductance in series with a condenser will have the same effect as the resistor or inductance alone.

The R.F. Power Factor is the internal resistance of a condenser other than the normal reactance of the capacity. In paper condensers it is usually the result of excessive contact resistance at R. (Fig. 1) Connect a 50-ohm resistor in series with a 0.1-mf. condenser and check the entire unit with a Fade-Ometer. The "eye" does not close, thus indicating the presence of a defective unit.

The R.F. Power Factor or internal resistance of electrolytic condensers makes them unfit for R.F. circuits unless shunted by a small paper condenser to correct the power factor (see Fig. 2). This internal resistance, however, is of no consequence when the condenser is used for filtering purposes at 60 cycles only. Test several new wet electrolytics with the Fade-Ometer. If any test bad shunt them with a small paper condenser and test again. Electrolytic filters used in R.F. circuits should *always* be shunted by small paper bypass condensers.

The new test unit provides a practical method of testing radio parts, especially condensers, with the radio receiver *in actual operation.* (*) It is *not necessary* to disconnect any condenser in a radio circuit to test it for open, intermittent, or R.F. power factor.

It is *not necessary* to disconnect condensers C (Fig. 3) from R or I to test for open, intermittent capacity, or R.F. power factor. To illustrate: connect CAPACITY test leads across a 50-ohm resistor or any R.F. coil. The "eye" will not close. Bypass the resistor or coil with a condenser and test again. The "eye" will close.

Testing C for shorts or intermittent leaks would necessarily require disconnecting as a D.C. continuity test must be used. A leaking or shorted condenser would cause incorrect bias on the tube, effects of which would be obvious. A locking feature is also provided that automatically *locks* the *indication* of a defective part, making it unnecessary for the technician to maintain a constant watch over the test.

There are 4 jacks across the bottom of the panel marked A.C.—OUTPUT—D.C., CONTINUITY and CAPACITY. All condenser tests are made from the CAPACITY jack, and direct current continuity tests from the CONTINUITY jack. The output jacks are for the purpose of using the "eye" as an infinite-ohms-resistance vacuum-tube voltmeter which draws no current from the circuit tested.

The test leads consist of a phone plug and 2 leads attached. One lead is equipped with a black alligator clip and the other with a handy banana prod. Two additional alligator clips are provided for attachment to the prod. One is black and the other is red. The red clip contains a resistor in the handle and is for use around A.V.C. systems, R.F. grids, plates, etc., and prevents bleeding or detuning of the circuit.

A ground lead with pin and clip is to be used only in cases when operation of the test unit causes hum or distortion. This is usual when testing audio coupling condensers and can be eliminated by connecting the Fade-Ometer ground to the set chassis. In no case should the radio set or test instrument be connected to an external ground. No harm would result but the test operation may be upset.

DEFECTIVE CONDENSER

Defective condensers are probably the greatest source of radio complaints. A condenser that is completely shorted is usually no problem for the average Serviceman, but the open or "intermittent" condenser will sometimes cause the most experienced technician considerable trouble to locate. There are usually a number of bypass and coupling condensers in a radio that can cause trouble with similar symptoms. Disconnecting to test intermittent or critical condensers is impracticable as the condenser is never open when tested. If by chance it should be open ordinary testers will invariably *heal* the condenser temporarily upon application of the test prods. The method of substituting good condensers is just as laborious and unreliable. At the best it is a guessing method and should be eliminated.

If fading or oscillation is the complaint the technician should be able to assume with some assurance approximately where the trouble is. If the set volume drops very low or cuts out completely one can be reasonably sure that a coupling condenser is defective. If the volume drops only slightly or oscillation occurs, an R.F. bypass, A.V.C. filter, or audio bypass should be suspected. A complete loss of signal with an increase in hiss, tube noise, or static, usually indicates that the oscillator has stopped oscillating, which may be due to a defective condenser or resistor in that circuit. Intermittent or continuous R.F. oscillation is usually due to defective bypassing. The stage that is oscillating can easily be determined by touching the grid caps of the various stages with the finger. The stage that most effectively stops the oscillation is the one that is oscillating.

To check condensers plug the leads into the CAPACITY jack. Use the prod with or without the black clip as desired but *do not* use the red clip. Touch the leads to the condenser terminals. If the "eye" closes the condenser is good, if it opens the condenser is defective. If the condenser is suspected of being intermittent try tapping the condenser lightly, tugging at the leads, etc., while under test. A test resulting in an open indication means that the condenser is too low in capacity, is open, or has too high R.F. power factor. See Fig. 1.

*See "Point-to-Point Capacity Testing," **Radio-Craft**, July, 1933.

Electrolytic filter condensers are not ordinarily tested with the Fade-Ometer except to measure R.F. power factor. If one should test defective it should not be discarded if it tests good otherwise, as it is still perfectly good for filtering for which it was intended. However if such a condenser is used in an R.F. circuit it should be shunted with a small paper or mica bypass condenser of about 0.05-mf. capacity, as explained above.

To check intermittent condensers by means of the INDICATOR LOCK, tune the radio receiver to a broadcast signal. *Do not* use a local signal generator or service oscillator. Plug the leads into the CAPACITY jack. Use black clip on the prod and attach the clips to the suspected condenser. In the case of audio coupling condensers this may cause hum or distortion and can be corrected by using the ground connection from the test unit to the set chassis. Do not use an external ground. Disconnect one clip at a time to check the set-up for proper operation. Set the locking switch to "locking" and repeat test for proper operation. Reset the locking switch by returning to "Manual" and then to "Locking." Note: The black clip should always be connected to the point that is nearest chassis electrically (see Fig. 4). If set-up is now correct let the radio set play continuously until a fade period occurs. If the trouble is due to the part under test, the "eye" will open and *stay* open, even should the part return to normal. If the trouble is not located in this test repeat on other suspected parts until the defective one is located.

DEFECTIVE CONDENSERS

To check coils, resistors, chokes, transformers, etc., for open circuit, plug the leads into the CONTINUITY jack and proceed with any ordinary continuity test. *Do not* attempt to test any part that has a voltage drop across it as that shown in Fig. 5A. To test, turn the radio receiver off. Coils such as used in R.F. grid or plate circuits may be conducting current with the radio set on but test can be made with the receiver in operation. Resistors usually have a considerable voltage drop across them and should not be tested with the set on. Do not use the ground connection to radio chassis when making these tests. The locking feature will operate with the continuity tests where the tested resistance is low and the red clip is not used. To check R.F. coils while the radio set is operating use the red clip on the prod to prevent bleeding or detuning the circuit. Direct-current continuity tests can be made across the primaries of R.F. coils (see Fig. 5B), with the radio set operating, as, due to its low D.C. resistance, there is no appreciable voltage drop across the coil. *Do not* ground Fade-Ometer to set.

To use the output indicator for set alignments, plug the leads into the "A.C." output jack when taking an audio signal from the set output. See Fig. 6. (Here exception is taken to the rule established in connection with Fig. 4 in that the prod lead goes to radio chassis and the clip lead to plate.) Adjust the radio set volume control until the "eye" is nearly closed. Proceed with alignment as usual, reducing the volume control as alignment proceeds. To take indication from the A.V.C. system (recommended whenever available) plug leads into "D.C." jack and use the red clip on the prod. When using A.V.C. voltage for measurement or alignment purposes connection can be made to any point in the A.V.C. network as shown by arrows 1-2-3-4 (Fig. 7). Connection must be made with the clip lead to chassis or diode cathode and the prod lead using the red clip to the negative voltage supplied by the diode. If audio signal is also supplied by the diode as shown, A.V.C. voltage cannot be taken from arrow points 1 and 4.

Arrow point 3 is recommended as the best point to connect the prod lead in most cases.

To set up automatic tuning on pushbuttoned-tuned radio sets, attach the black clip of the new test unit to the set chassis and its red clip to any A.V.C.-controlled grid cap. Adjust button settings for maximum closing of the "eye". If "eye" over-closes use a shorter aerial to reduce the signal.

To use a vacuum-tube voltmeter, plug leads into jacks "D.C." and use red clip on the prod. The device is then operating as an infinite-ohms-resistance vacuum-tube voltmeter and draws no current from the circuit tested. The prod lead is negative. See Fig. 7. As it takes 8 volts to close the eye of a 6E5 tube or 22 volts to close a 6G5, a fairly accurate estimate of voltage measurements can be made. A greater voltage than specified for the particular tube will overclose the eye and a lesser voltage will open the eye in varying degrees. The use of the vacuum-tube voltmeter is valuable in checking A.V.C. voltages and they can be measured quite accurately with little practice. An ordinary service voltmeter even if of extremely high internal resistance is of no value whatsoever for the above uses.

This article has been prepared from data supplied by courtesy of "Fade-Ometer" Company.

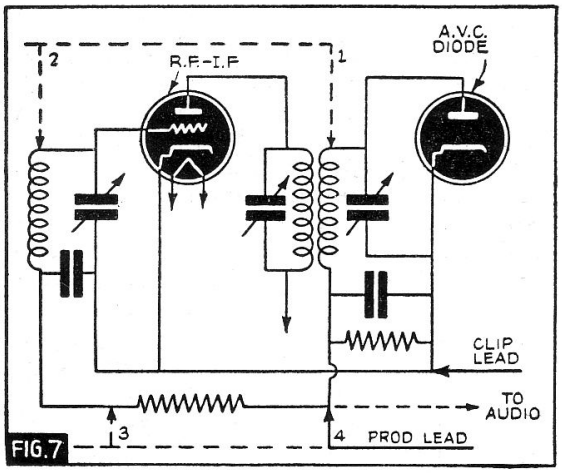

FIG.7