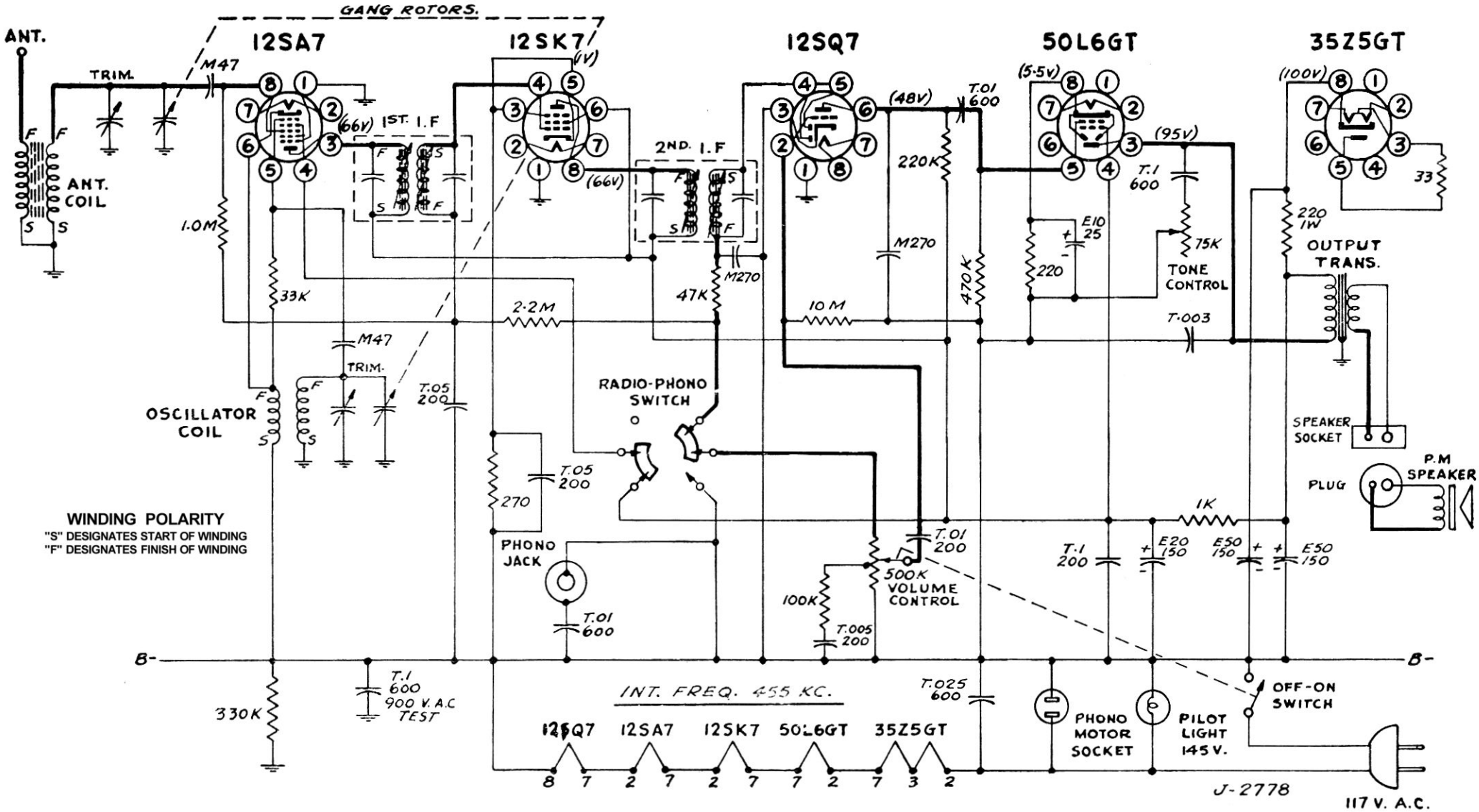

ALL VOLTAGES ± 10% MEASURED TO B- WITH 20,000 OHM/VOLT METER, 117 V. LINE.

⏚ CHASSIS GROUND ONLY, NOT EXTERNAL.

Electrohome

Roamer 51-141 & 51-142

COMPONENT VALUES

RESISTORS: HALF WATT UNLESS OTHERWISE NOTED.
20% TOLERANCE UNLESS OTHERWISE NOTED.
K = 1000 OHMS.
M = 1,000,000 OHMS.

CONDENSERS: T=TUBULAR, FOLLOWED BY CAP. IN MFD. & D.C.W.V.
E=ELECTROLYTIC, FOLLOWED BY CAP. IN MFD. & D.C.W.V.
C=CERAMIC, FOLLOWED BY CAP. IN MMFD. & TOL. IF CRITICAL.
M=MICA, FOLLOWED BY CAP. IN MMFD. & TOL. IF CRITICAL.

ALIGNMENT AND SENSITIVITY
SIGNAL GENERATOR MODULATED 30% AT 400 C.P.S.

STEP	APPLY SIGNAL AT KC.	APPLY SIGNAL TO	THRU SERIES DUMMY	SET GANG AT	ADJUST FOR MAX. OUTPUT.	NOMINAL SENSITIVITY FOR 50 MILLIWATTS OUTPUT.
1	455	12SK7 #4 PIN.	.05 µfd.		2ND. I.F	3000 µV.
2	455	12SA7 #8 PIN.	.05 µfd.	MINIMUM CAPACITY	1ST. I.F 2ND. I.F	90
3	1460	ANT.	400Ω	1460	OSC. TRIM. ANT. TRIM.	30
4	600	ANT.	400Ω	600	CHECK ONLY	30

SPECIFICATIONS

Standard Broadcast Range ..... 540 Kc. - 1600 Kc.
Intermediate Frequency ..... 455 Kc
Power Consumption (Radio Only) ..... 30 Watts
Power Consumption (Radio and Phono) ..... 45 Watts
Undistorted Output ..... 700 mw.
Maximum Power Output ..... 900 Mw

141 Webster Model 156 Assy.

GE-DL-IRM-90 Cartridge Assy

142 Webster Model 100 Assy.

Astatic LQD Cartridge & Bracket Assy.

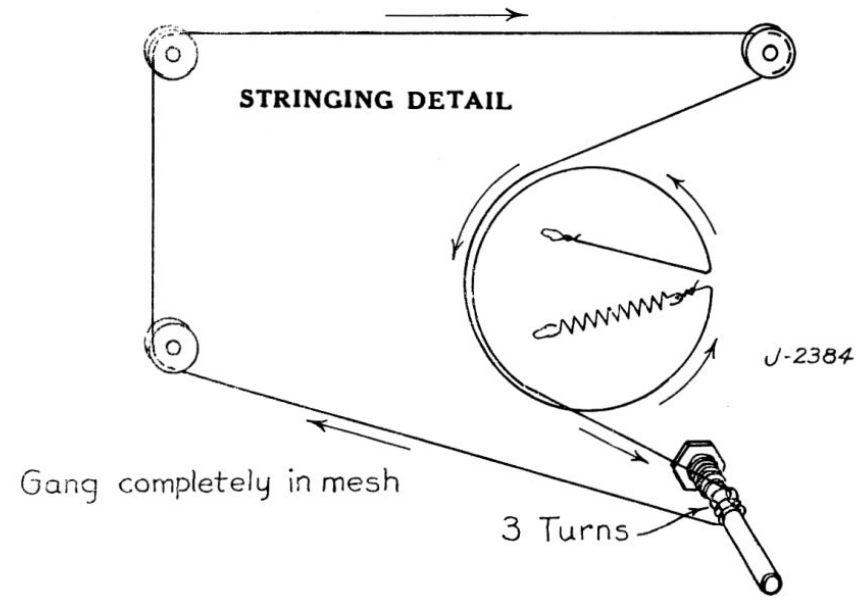

Roamer 51-141 & 51-142

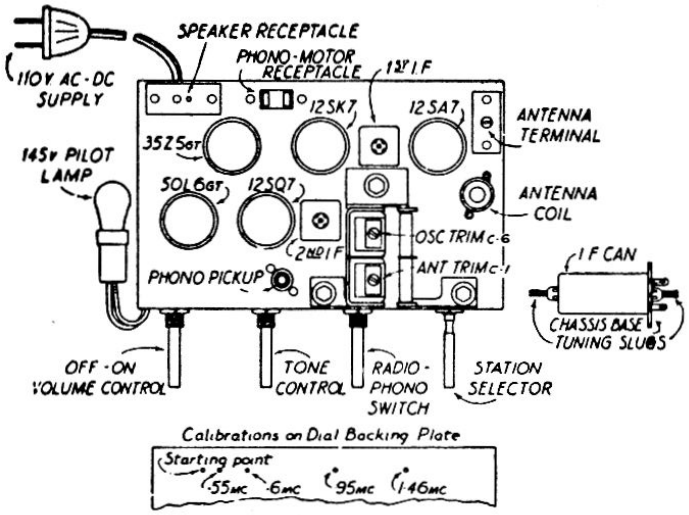

CHASSIS LAYOUT