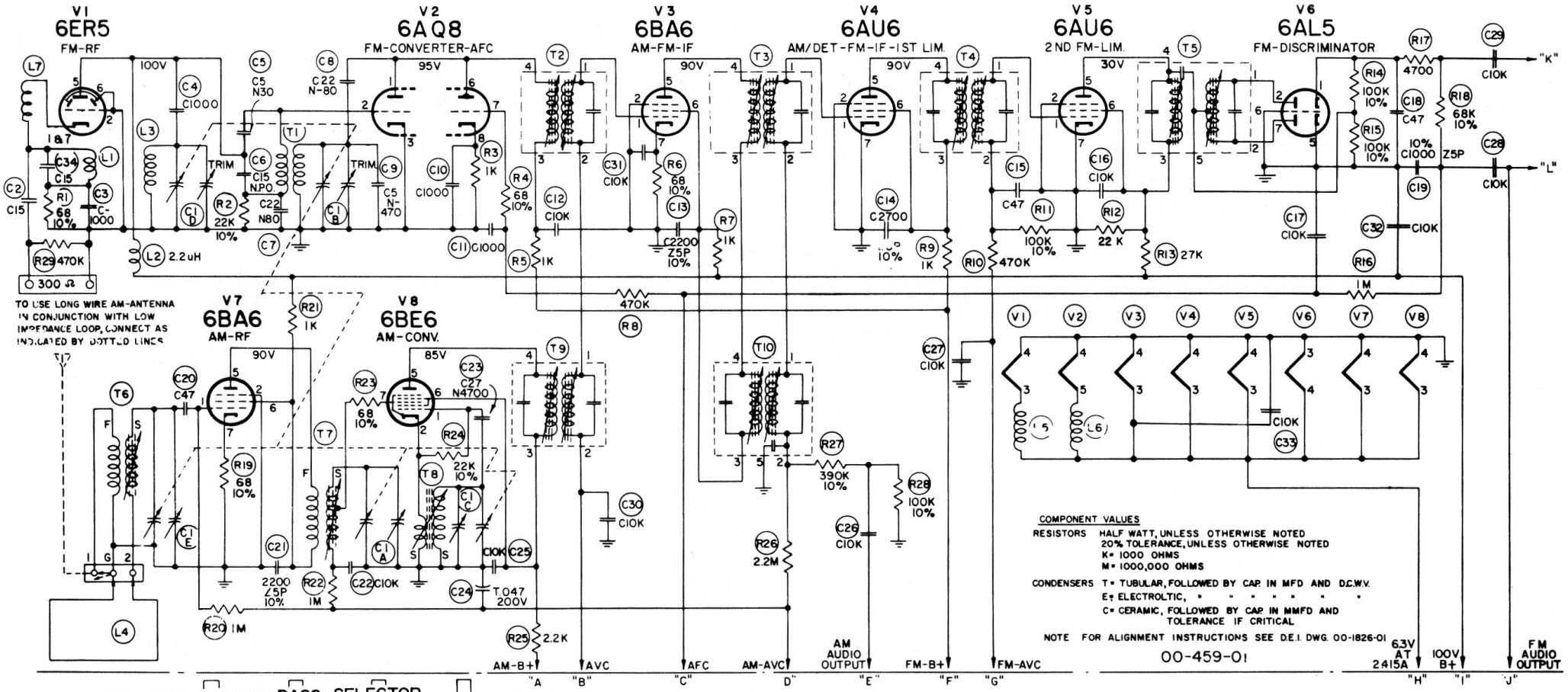

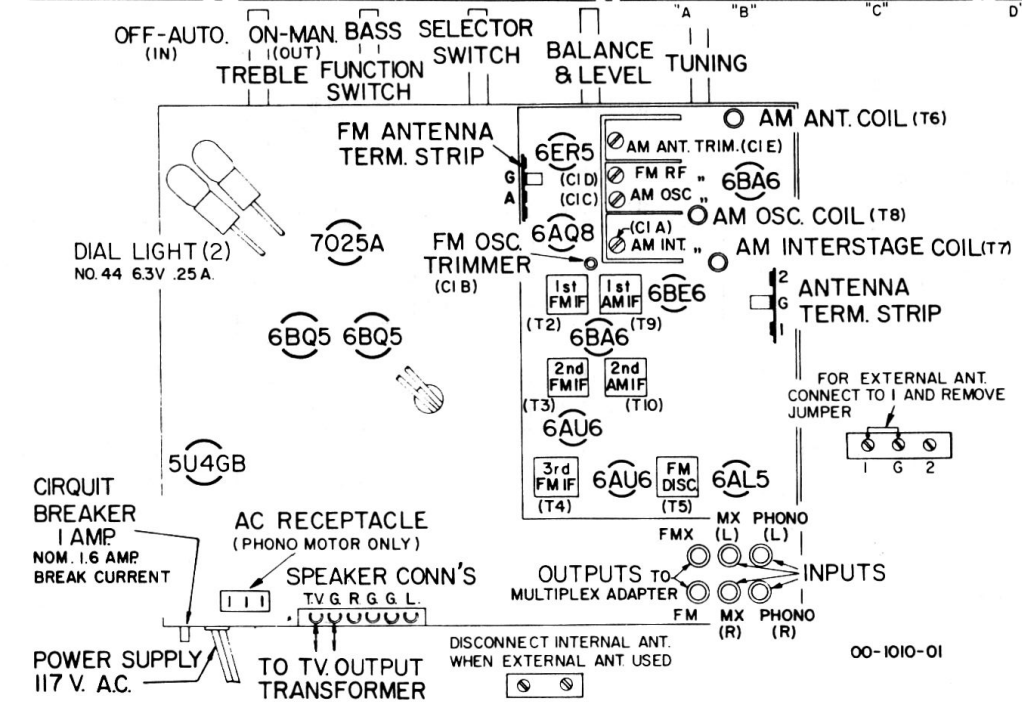

Symbol	Part No.	Description
L7	21-300-01	Coil R.F. Low Pass Filter
L1, L5, L6	21-300-02	R.F. Heater Choke and Peaking Coil
T6	21-410-01	B.C. Antenna Coil
T8	21-421-01	B.C. Oscillator Coil
T7	21-428-01	B.C. Interstage Coil
T9	21-432-01	AM I.F. Transformer 1st.
T10	21-432-03	AM I.F. Transformer 2nd.
T2	21-433-01	FM I.F. Transformer
T3	21-433-02	FM I.F. Transformer
T4	21-433-02	FM I.F. Transformer

Symbol	Part No.	Description
L2	21-439-02	R.F. Choke 2.2 uh
T1	(21-445-02	F.M. Feedback Coil
	(21-457-01	F.M. Oscillator Coil
T5	21-455-01	F.M. Discriminator Coil
L3	21-458-01	F.M. R.F. Coil
C1	45-31-01	AM-FM Gang Condenser
C1B	45-36-01	FM Trimmer

ELECTROHOME MILANO
AM-FM TUNER SCHEMATIC

ELECTROHOME MILANO AM-FM TUNER ALIGNMENT

STEP	DUMMY ANTENNA	SIGNAL APPLIED TO	FREQ.	MODULATION	BAND-SWITCH SETTING	DIAL POINTER SETTING	INDICATING METER	ADJUST	REMARKS	NOMINAL SENSITIVITY
1	.05 uf	Pin # 1 V3 6BA6	455 Kc/s	400 c.p.s. AM at 30%	AM	600 Kc/s	AC-VTVM To Point "E"	T10 2nd. AM-IF	Adjust for maximum output.	5000 uv for 20 mv output
2	.05 uf	Pin # 7 V8 6BE6	455 Kc/s	400 c.p.s. AM at 30%	AM	600 Kc/s	AC-VTVM To Point "E"	T9 1st. AM-IF	Adjust for maximum output.	350 uv for 20 mv output
3	200 uuf	AM Ant. Term. Strip # 1	600 Kc/s	400 c.p.s. AM at 30%	AM	600 Kc/s	AC-VTVM To Point "E"	T6, T7 and T8	Connect for long wire antenna, adjust for maximum output.	3.5 mv for 20 mv output
4	200 uuf	AM Ant. Term. Strip # 1	1460 Kc/s	400 c.p.s. AM at 30%	AM	1460 Kc/s	AC-VTVM To Point "E"	C1E, C1A and C1C Trimmers	Connect for long wire antenna, adjust for maximum output.	2.5 mv for 20 mv output
5	Repeat steps 3 and 4, check for band coverage at 535 Kc/s - 1650 Kc/s and for tracking at 950 Kc/s.									
6	-	Pin # 1 V4 6AU6	10.7 Mc/s	-	FM	Point of no interference	DC-VTVM To Point "G"	T4 3rd. FM-IF	Adjust for maximum meter deflection.	15000 uv for 1V output
7	-	Pin # 1 V3 6BA6	10.7 Mc/s	-	FM	Point of no interference	DC-VTVM To Point "G"	T3 2nd. FM-IF	Adjust for maximum meter deflection.	250 uv for 1V output
8	-	C1D FM Gang	10.7 Mc/s	-	FM	Point of no interference	DC-VTVM To Point "G"	T2 1st. FM-IF	Adjust for maximum meter deflection.	-
9	-	Pin # 1 V4 6AU6	10.7 Mc/s	-	FM	Point of no interference	DC-VTVM To Pin # 5 of T5	T5 FM Discriminator Primary	Adjust for maximum meter deflection.	10000 uv for 3V output
10	-	Pin # 1 V4 6AU6	10.7 Mc/s	-	FM AFC	Point of no interference	DC-VTVM To Point "C"	T5 FM Discriminator Secondary	Adjust for zero voltage.	-
11	270 ohms	FM-Ant. Term. Strip	90 Mc/s	400 c.p.s. FM 22.5 Kc/s Deviation	FM	90 Mc/s	AC-VTVM To Point "J"	Expand or compress L3 and T1	Adjust for maximum output.	3 uv for 100 mv output
12	270 ohms	FM-Ant. Term. Strip	106 Mc/s	400 c.p.s. FM 22.5 Kc/s Deviation	FM	106 Mc/s	AC-VTVM To Point "J"	C1B and C1D Trimmers	Adjust for maximum output.	2.5 uv for 100 mv output
13	Repeat steps 11 and 12 until output drops at least 20 db. when mod. is turned off.									3.5 uv

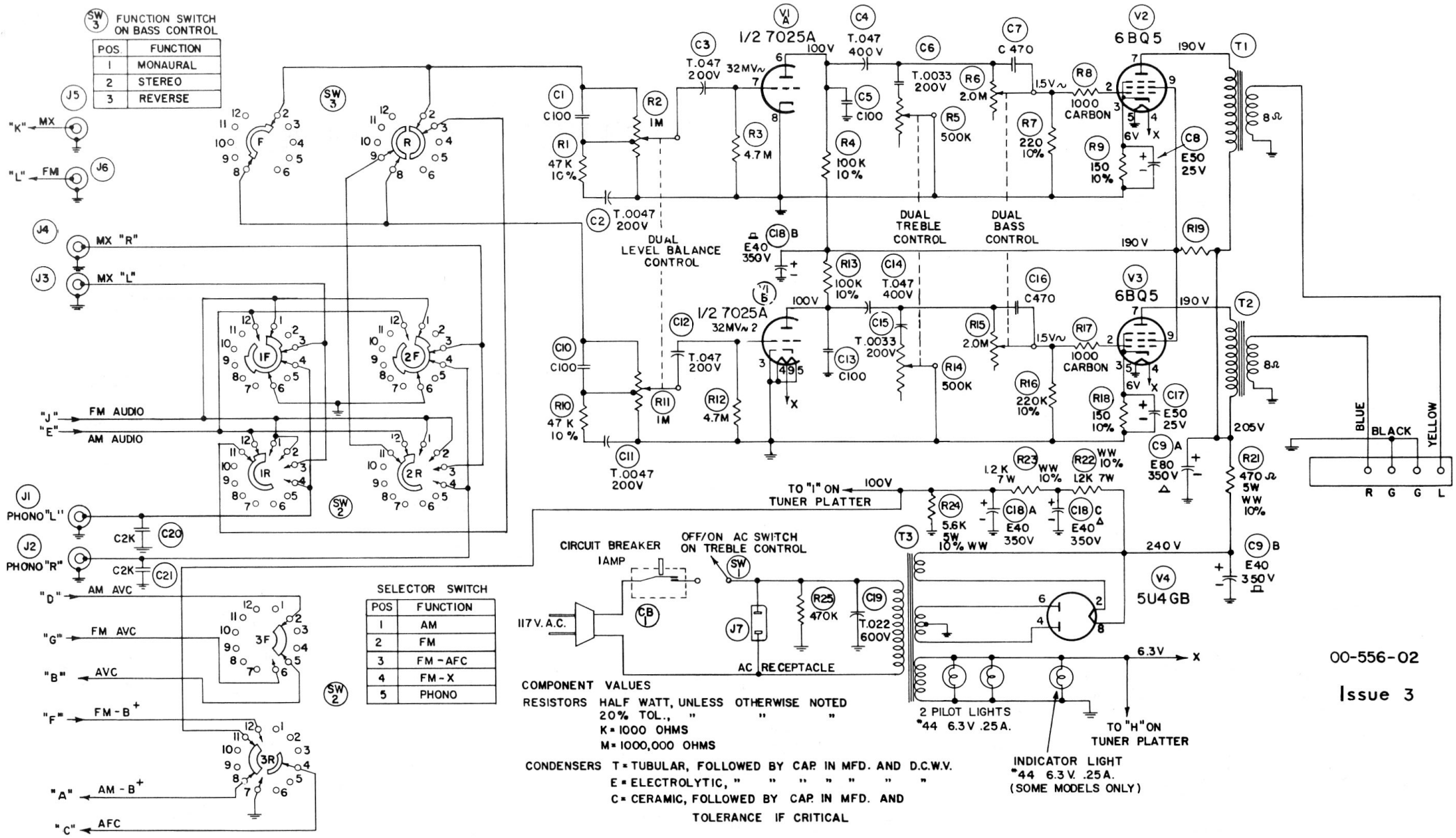

Symbol	Part No.	Description
T3	24-10064-01	Power Transformer 60 cycle
T1, T2	24-80035-03	Output Transformer 8 ohm V.C.
CB1	26-65-02	Circuit Breaker
SW2	26-71-01	Selector Switch
	35-519-01	Drive Shaft
	35-602-01	Pointer Carriage
R5/R14	41-120-06	Control — Treble and Switch
R2/R11	41-122-05	Control — Balance, Level
R6/R15	41-150-01	Control — Bass and Mode Switch
R24	42-1-09	Resistor — Wirewound 5600 ohm ± 10% 5W
R20	42-1-21	Resistor — Wirewound 7.5 ohm ± 10% 10W
R21	42-1-46	Resistor — Wirewound 470 ohm ± 10% 5W
R22, R23	42-1-61	Resistor — Wirewound 1200 ohm ± 10% 7W
C8, C17	44-40-04	Electrolytic — Tub. 50 ufd. x 25V
C9	44-113-01	Electrolytic — Dual 80, 40 ufd. x 350V
C18	44-118-01	Electrolytic — Triple 40, 40, 40 ufd. x 350V

Electrohome Milano Power Amplifier