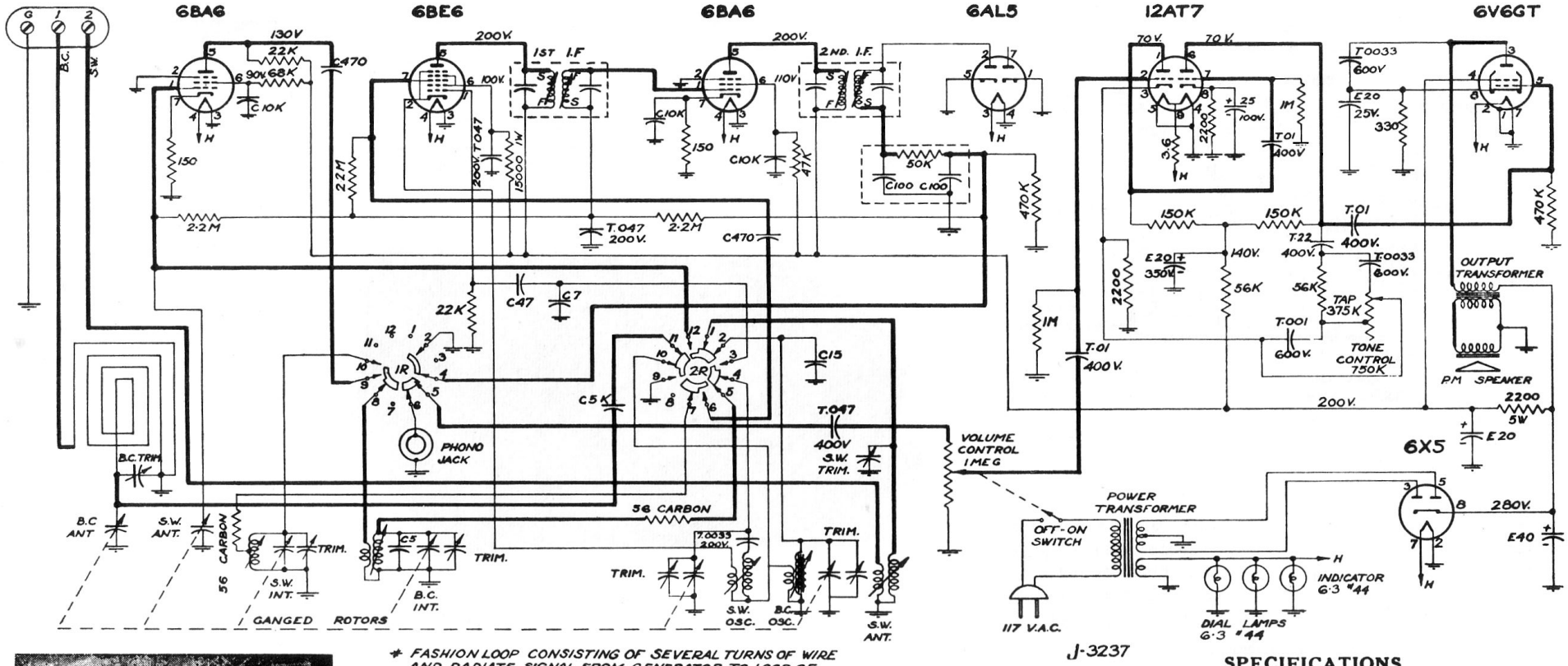

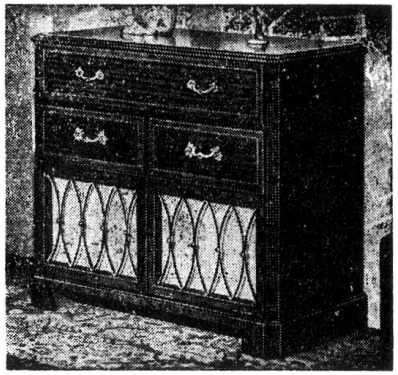

* FASHION LOOP CONSISTING OF SEVERAL TURNS OF WIRE AND RADIATE SIGNAL FROM GENERATOR TO LOOP OF RECEIVER, ADJUST TRIMMERS FOR MAX. OUTPUT.

ALIGNMENT AND SENSITIVITY

SIGNAL GENERATOR MODULATED 30% AT 400 C.P.S.

APPLY SIGNAL AT KC	TO	THRU SERIES DUMMY	SET GANG AT	ADJUST FOR MAX. OUTPUT	NOMINAL SENSITIVITY FOR 500 MILLIWATTS OUTPUT	
455	6BA6 #1 PIN	.05 μfd		2ND I.F. IRON CORES	6000 μv	THESE VALUES APPLY ONLY
455	6BE6 #7 PIN	.05 μfd	1460	1ST I.F. 2ND I.F.	180 μv.	WITH TONE CONTROL SET
1460	ANT	*	1460	B.C. OSC TRIM. B.C. INT-STG TRIM. B.C. ANT TRIM.	30 μv/M	AT CENTRE POSITION
600	ANT.	*	600	CHECK ONLY	100 μv/M	
15 MC	ANT	400 Ω	15 MC.	S.W. OSC. TRIM. S.W. INT-STG TRIM. S.W. ANT. TRIM.	60 μv.	
9.5 MC	ANT.	400 Ω	10 MC.	CHECK POINT	15 μv.	

ALL VOLTAGES ± 10% MEASURED TO CHASSIS WITH 20,000 OHM/VOLT METER 117 V. LINE. RADIO PHONO SWITCH SHOWN IN PHONO POSITION.

SPECIFICATIONS

Standard Broadcast Range	535 Kc — 1650 Kc
Short Wave Range	9.0 Mc. - 15.5 Mc.
Intermediate Frequency	455 KC.
Power Consumption (Radio Only)	52 Watts
Power Consumption (Radio and Phono)	70 Watts
Undistroted Output	2.5 Watts
Maximum Power Output	4.0 Watts

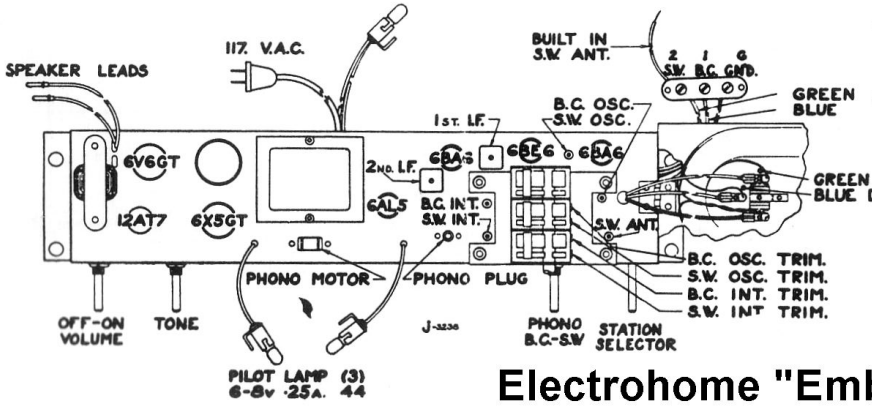

COMPONENT VALUES

RESISTORS: HALF WATT UNLESS OTHERWISE NOTED.
20% TOLERANCE UNLESS OTHERWISE NOTED.
K = 1000 OHMS
M = 1000,000 OHMS.

CONDENSERS T = TUBULAR, FOLLOWED BY CAP IN MFD. AND D.C.W.V.
E = ELECTROLYTIC FOLLOWED BY CAP IN MFD & D.C.W.V.
C = CERAMIC FOLLOWED BY CAP IN MMFD & TOL IF CRITICAL
M = MICA FOLLOWED BY CAP IN MMFD & TOL IF CRITICAL

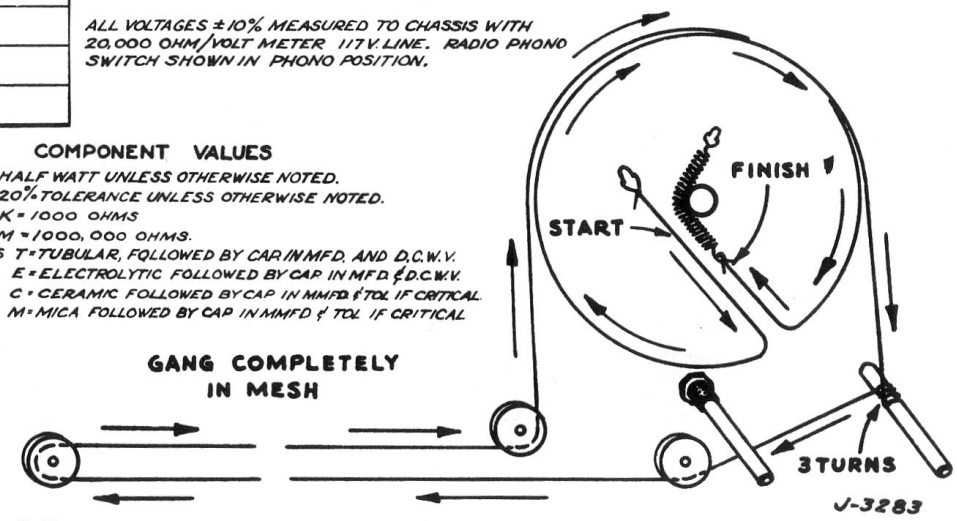

STRINGING DETAIL

Electrohome "Embassy A"