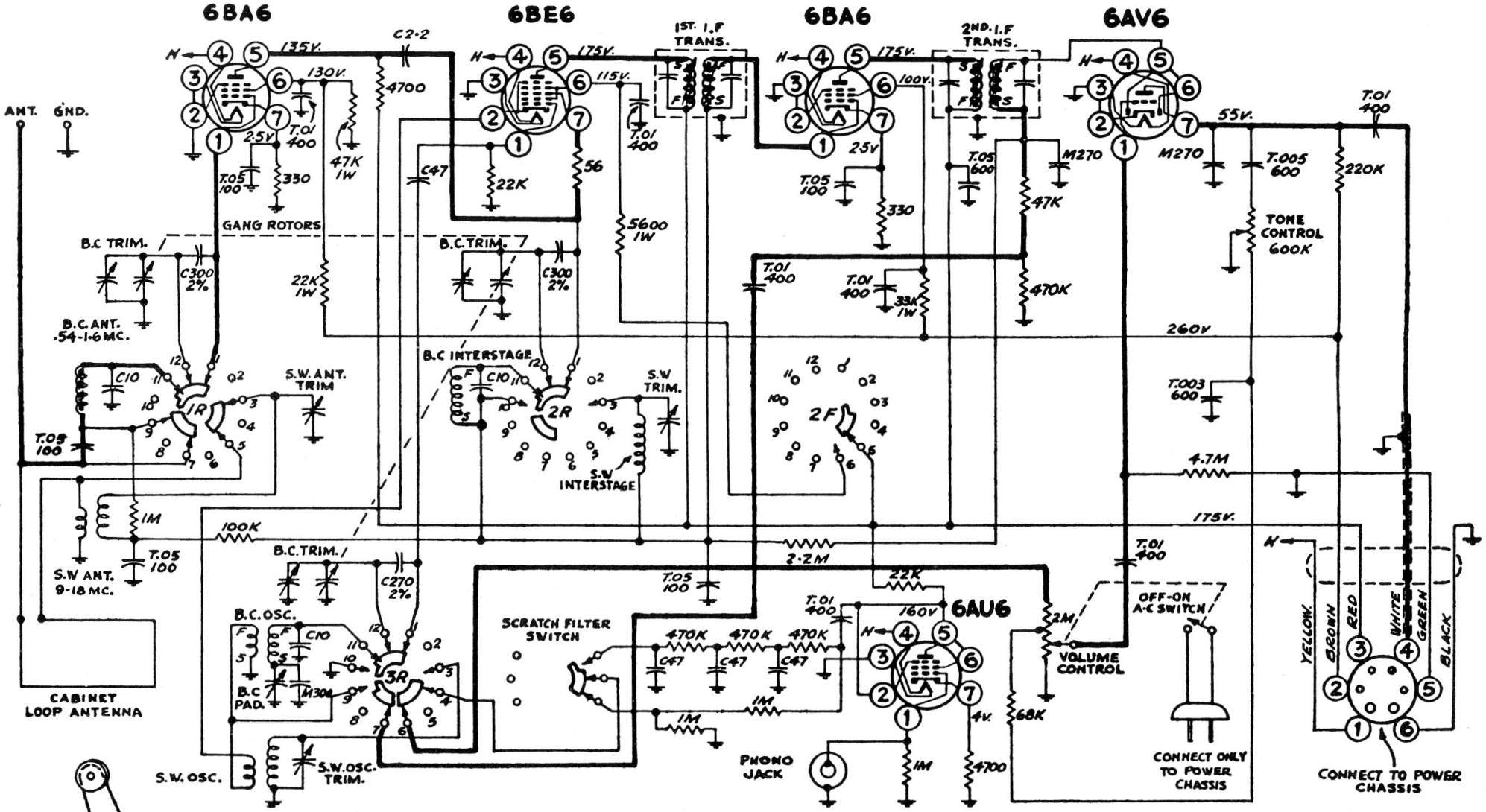

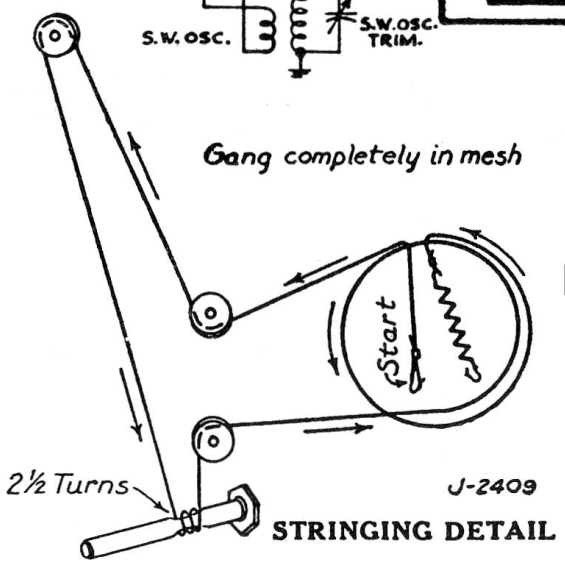

STRINGING DETAIL

SELECTOR SWITCH SHOWN IN PHONO POSITION.
ALL D.C. VOLTAGES MEASURED TO CHASSIS WITH 1000 OHM/VOLT METER.

Electrohome "Chippendale 9"

SPECIFICATIONS

Standard Broadcast Range	535 Kc — 1650 Kc
Short Wave Range	9.0 Mc. - 18.0 Mc.
Intermediate Frequency	455 Kc
Power Consumption (Radio Only)	85 Watts
Power Consumption (Radio and Phono)	95 Watts
Undistorted Output	6 Watts
Maximum Power Output	9 Watts

COMPONENT VALUES

RESISTORS: HALF WATT, UNLESS OTHERWISE SPECIFIED.
20% TOLERANCE UNLESS OTHERWISE SPECIFIED.
K = 1000 OHMS.
M = 1000,000 OHMS.

CONDENSERS: T = TUBULAR, FOLLOWED BY CAP. IN MFD. AND D.C.W.V.
E = ELECTROLYTIC, FOLLOWED BY CAP. IN MFD. AND D.C.W.V.
C = CERAMIC, FOLLOWED BY CAP. IN MMFD. & TOL. IF CRITICAL.
M = MICA, FOLLOWED BY CAP. IN MMFD. & TOL. IF CRITICAL.

Electrohome Chippendale "9" Tuner & Power Supply/Amp

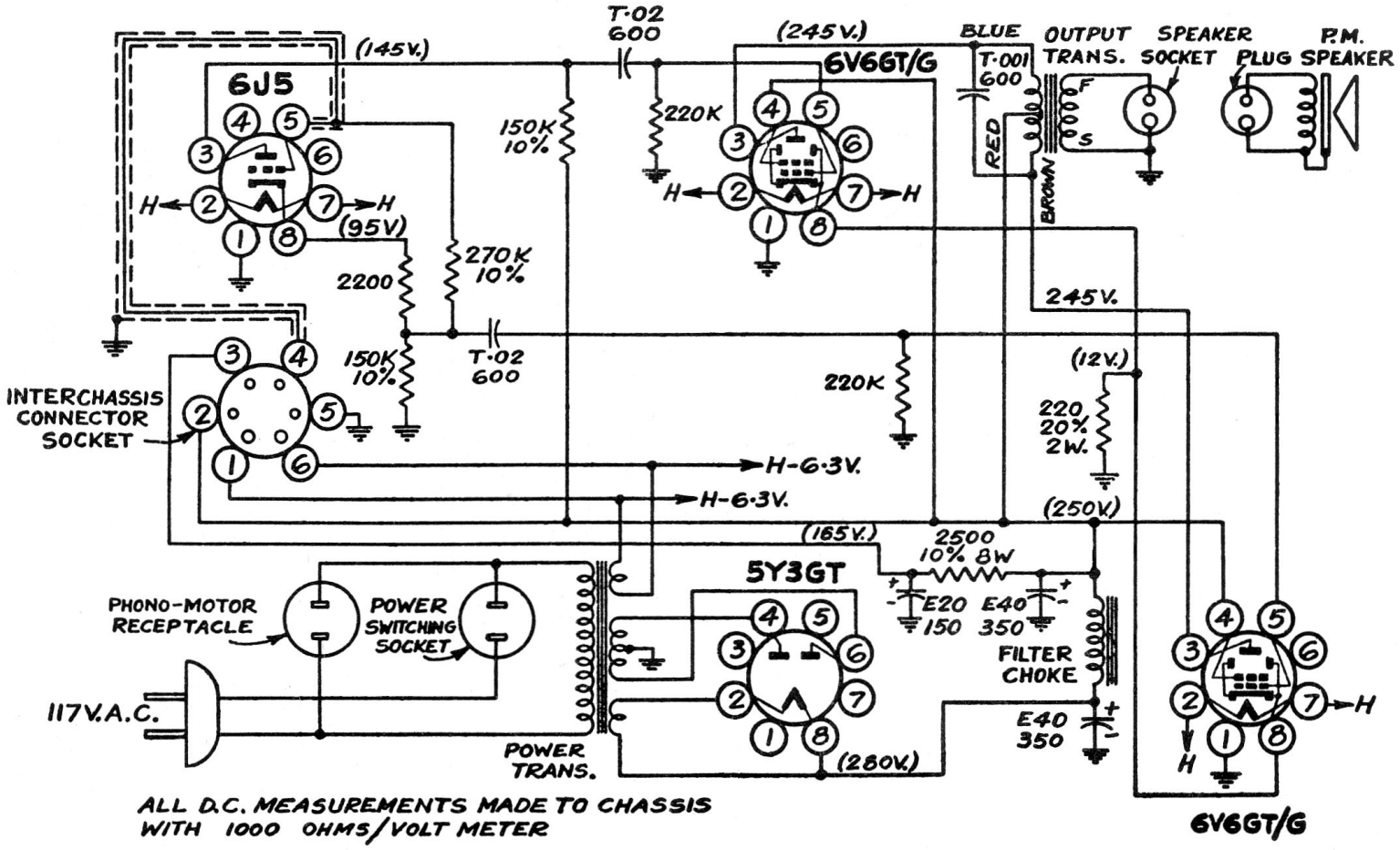

ALIGNMENT AND SENSITIVITY SIGNAL GENERATOR MODULATED 30% AT 400 C.P.S					
APPLY SIGNAL AT KC.	TO	THRU SERIES DUMMY	SET GANG AT	ADJUST FOR MAX. OUTPUT	NOMINAL SENSITIVITY FOR 500 MILLIWATTS OUTPUT.
455	6BE6 #7 PIN	.05 μfd.	OPEN	1ST & 2ND. I.F. IRON CORES	90 μV.
1460	6BE6 #7 PIN	.05	1460 KC.	B.C. OSC. TRIM.	100
1460	ANT.	200 μμfd.	1460 KC.	B.C ANT. & INTERSTAGE TRIMMER	20
600	ANT.	200 μμfd.	600 KC.	B.C OSC. PADDER	20
16 MC.	ANT.	400Ω	16 MC.	S. W. OSC. INTERSTAGE & ANT. TRIM.	20
10 MC.	ANT.	400Ω	10 MC.	CHECK POINT	20

"CHIPPENDALE 9"

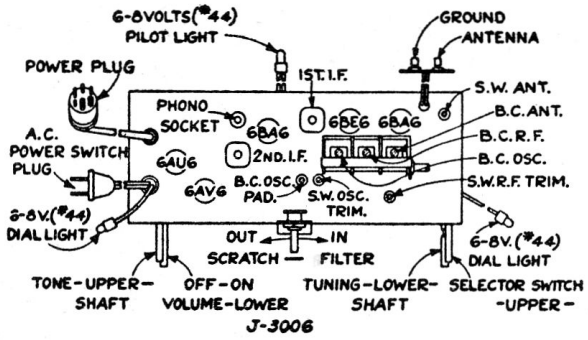

CHASSIS LAYOUT CHART

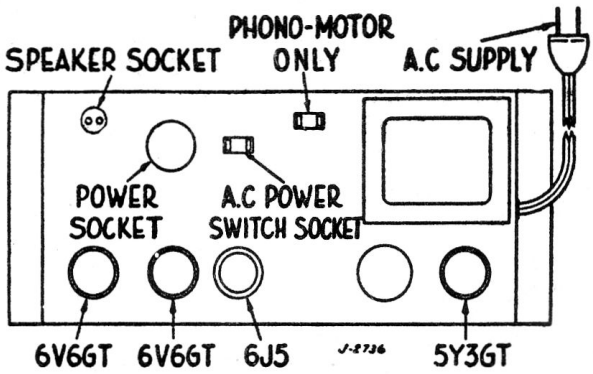

POWER SUPPLY & AUDIO CHASSIS