Catalina, Catalina U, Catalina CU, & Chancellor/M

Electrohome

# SPEAKER CONNECTIONS and CROSSOVER SCHEMATICS

## CHASSIS LAYOUT

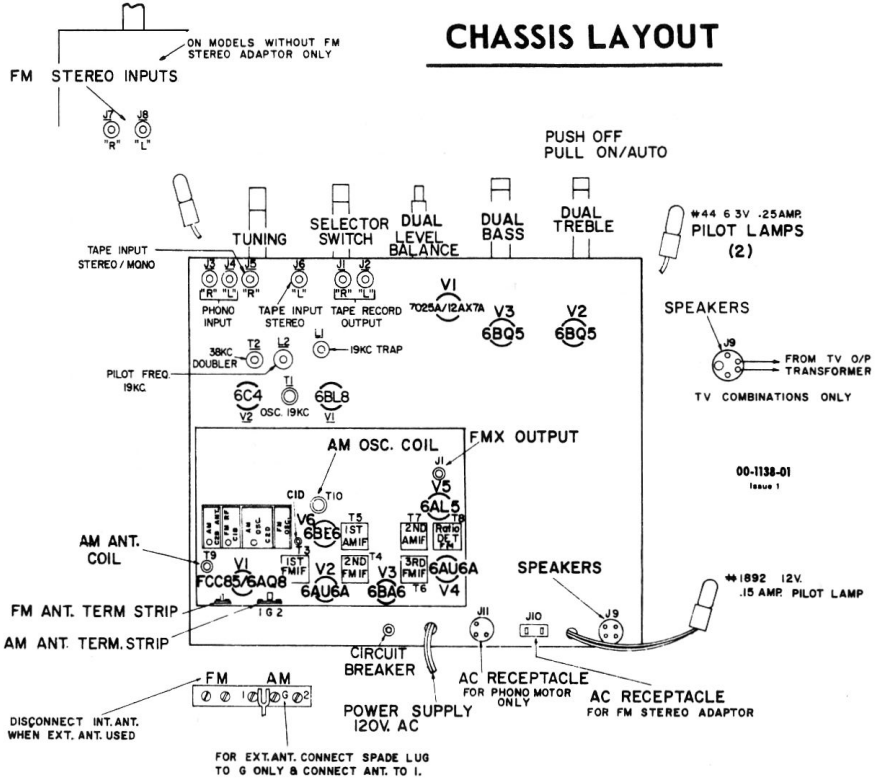


## CATALINA

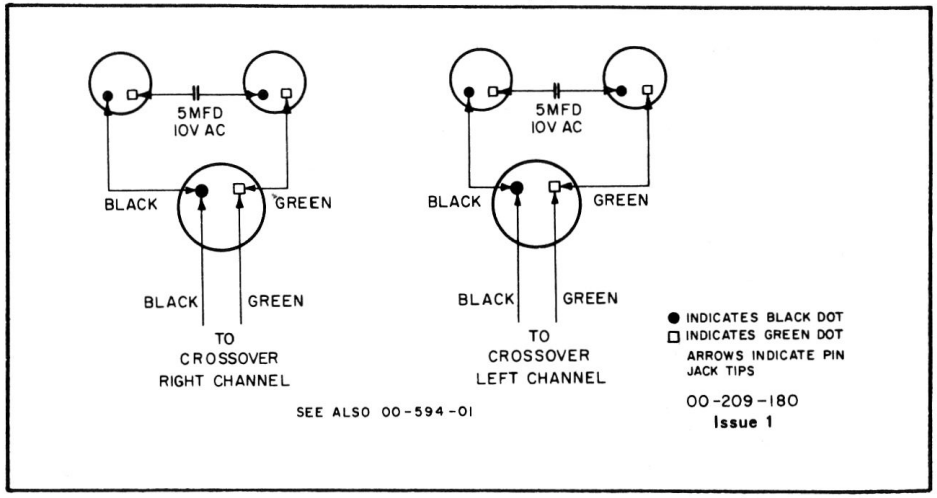


## CATALINA

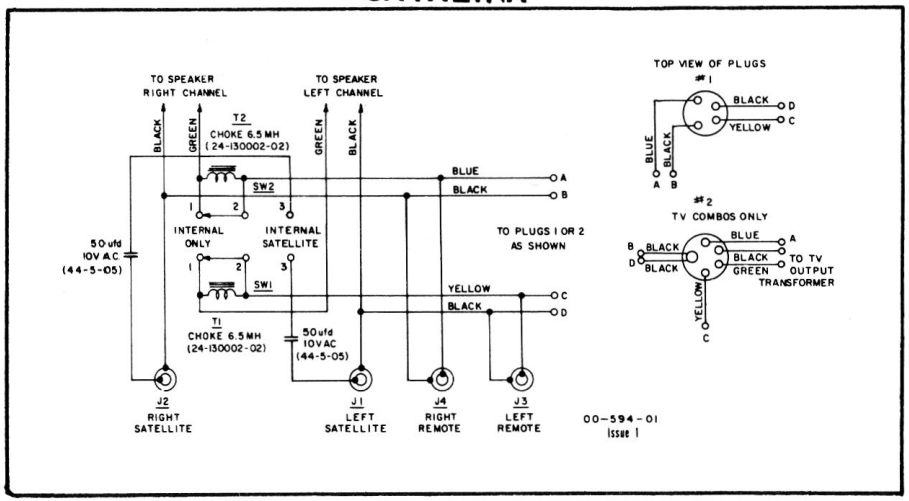


## STRINGING DETAIL

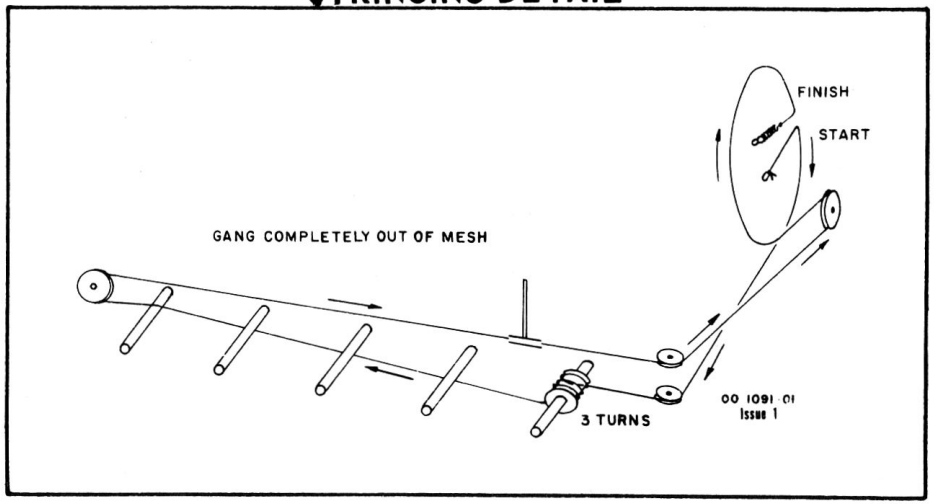

# FM STEREO RADIO ADAPTER SCHEMATIC

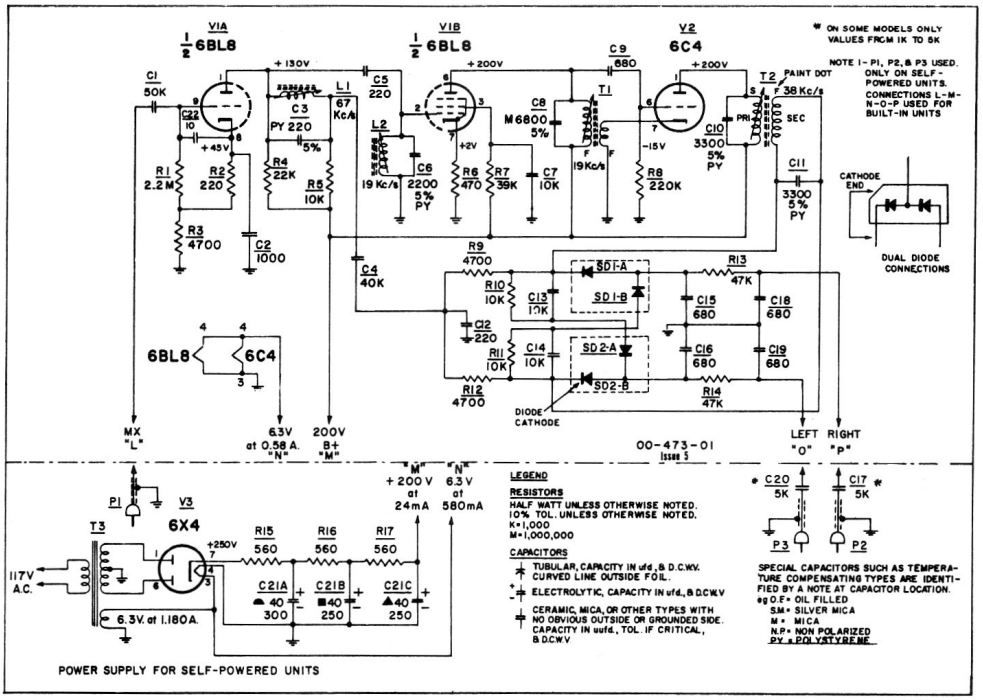


## STEREO RADIO ADAPTER ALIGNMENT INSTRUCTIONS

### EQUIPMENT REQUIRED

1. Multiplex Generator.
2. Audio Generator accurately calibrated at 67 Kc.
3. Audio scope and electronic switch or double beam scope.

### ALIGNMENT INSTRUCTIONS

1. Remove 6C4 oscillator tube.
2. Connect audio generator to input of multiplex adapter and set generator at 67 Kc.
3. Connect scope to the junction of R9 and R12.
4. Adjust 67 Kc. trap L1 for minimum pattern on scope.
5. Remove audio generator and connect multiplex generator to input of multiplex adapter. Set generator at 19 Kc.
6. Connect the scope input to pin number 6 on the 6C4 socket using a low capacity probe.
7. Adjust L2 and T1 for maximum scope pattern.
8. Replace 6C4 tube.
9. Connect scope to junction of R9 and R10.
10. Adjust 38 Kc coil T2 for maximum scope pattern.
11. Check mutiplex generator as follows:
    (a) Connect output of generator to input of scope.
    (b) Adjust the generator to provide a multiplex signal modulated on one channel only. 19 Kc pilot signal must be switched off.
    (c) Observe the scope waveform. If the generator is adjusted properly, the scope pattern will be an audio sine wave envelope of 38 Kc with a straight base line.
    (d) If pattern is not correct, adjust generator according to instructions received with the instrument.

12. Connect the multiplex generator output to the adapter input.
13. Connect the outputs of the adapter to the inputs on the electronic switch.
14. Connect the output of the electronic switch to the scope inputs.
    NOTE: If an electronic switch is not available, a manual switching arrangement may be used.
15. Adjust generator for composite signal with one channel audio and 19 Kc pilot. Total system modulation should be 80 to 90 per cent.
16. With the generator output adjusted to a medium level, approximately one volt, adjustement of oscillator coil T1 will produce three peaks. One peak will appear on one scope trace and two peaks on the other. The setting of the slug producing the single peak on one scope trace is correct and most stable.
17. Replace the base plate.
18. Increase signal input to between five and ten volts (or maximum on the generator).
19. Adjust 19 Kc coil L2 for maximum audio output on correct trace found in item 16.
20. Reduce signal to 200 millivolts or just above the point where multiplex adapter oscillator loses sync.
21. Adjust oscillator coil T1 for peak on correct trace found in item 16. Signal on correct trace should be maximum possible and signal on the other trace should be minimum.
22. Repeat steps 18, 19, 20, and 21 until no further improvement is noted. (Separation on the average unit should measure 20 db minimum.)

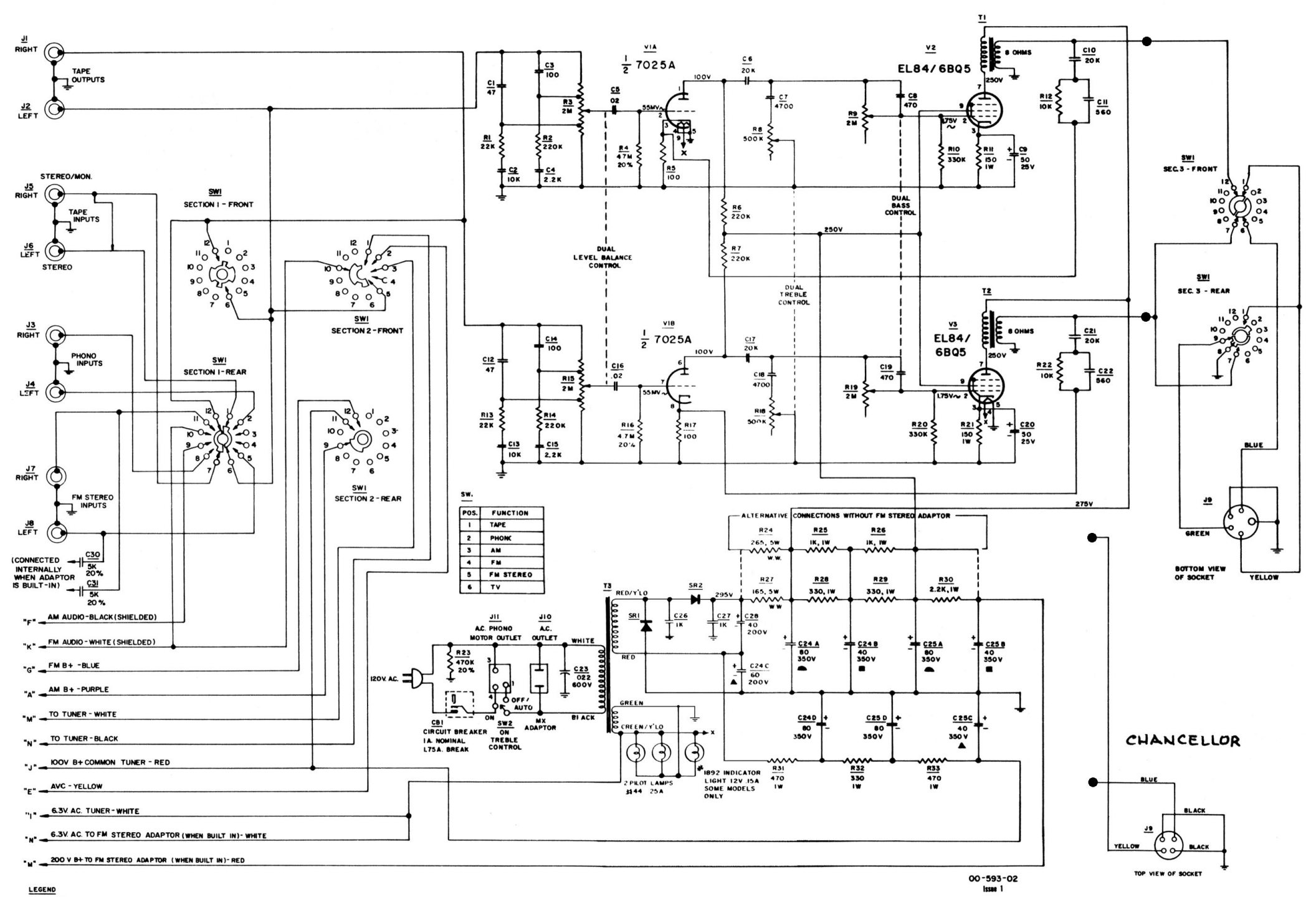


LEGEND

RESISTORS

HALF WATT UNLESS OTHERWISE NOTED
10% TOLERANCE UNLESS OTHERWISE NOTED
K=1,000. M=1,000,000

CAPACITORS

TUBULAR, CAPACITY IN ufd., AND D.C.W.V.
CURVED LINE, OUTSIDE FOIL

ELECTROLYTIC. CAPACITY IN ufd., AND D.C.W.V.

CERAMIC, MICA, OR OTHER TYPES WITH NO OBVIOUS OUTSIDE OR GROUNDED SIDE. CAPACITY IN uufd., TOLERANCE IF CRITICAL AND D.C.W.V.

SPECIAL CAPACITORS SUCH AS TEMPERATURE COMPENSATING TYPES ARE IDENTIFIED NOTE AT CAPACITOR LOCATION
eg O.F.=OIL FILLED
S.M.=SILVER MICA
M.=MICA
N.P=NON POLARIZED

# Electrohome

## Catalina, Catalina U, Catalina CU, & Chancellor/M

# AMPLIFIER

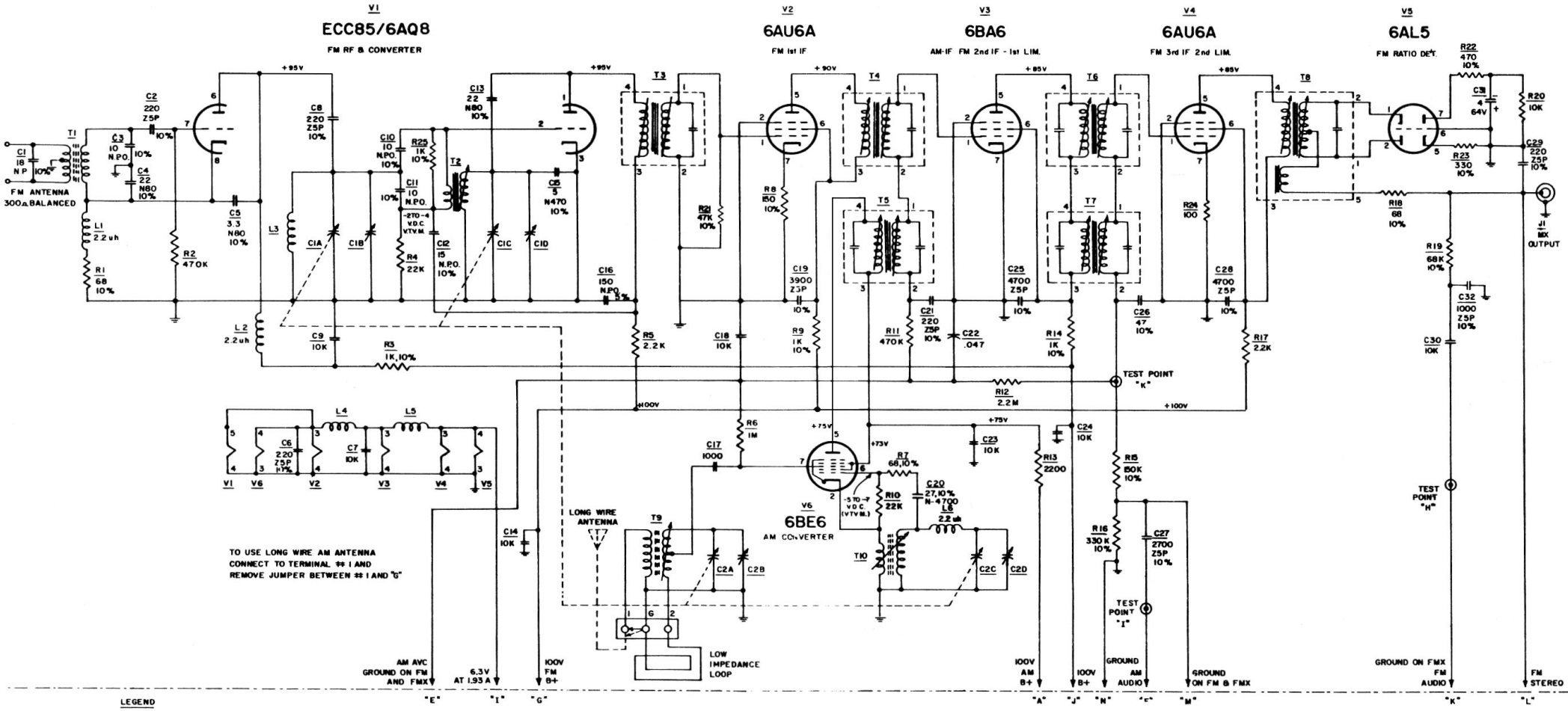


LEGEND

RESISTORS

HALF WATT UNLESS OTHERWISE NOTED.
20% TOL. " " "
K=1,000 OHMS
M=1,000,000 OHMS

CAPACITORS

TUBULAR, CAPACITY IN ufd, AND D.C.W.V. CURVED LINE, OUTSIDE FOIL.

ELECTROLYTIC CAPACITY IN ufd., AND D.C.W.V.

CERAMIC, MICA OR OTHER TYPES WITH NO OBVIOUS OUTSIDE OR GROUNDED SIDE. CAPACITY IN uufd, TOL. IF CRITICAL, AND D.C.W.V.

SPECIAL CAPACITORS SUCH AS TEMPERATURE COMPENSATING TYPES ARE IDENTIFIED BY A NOTE AT CAPACITOR LOCATION.
e.g. O.F.=OIL FILLED
M=MICA
S.M.=SILVER MICA
N.P.=NON POLARIZED.
N.P.O.=NEG. POS. ZERO
N 4700=TEMP COMPENSATION

NOTE - FOR ALIGNMENT INSTRUCTIONS SEE D.E.I. DWG 00-1958-01

00-474-01
Issue 9

# AM-FM TUNER SCHEMATIC (CATALINA)

# AM-FM TUNER ALIGNMENT INSTRUCTIONS (CATALINA)

| STEP | DUMMY ANTENNA | SIGNAL APPLIED TO | FREQ. | MODU-LATION | BAND SWITCH SETTING | DIAL POINTER SETTING | INDI-CATING METER | ADJUST | REMARKS | NOMINAL SENSITIVITY |
|---|---|---|---|---|---|---|---|---|---|---|
| 1 | .05 uf | Pin #1 V3 6BA6 | 455 Kc/s | 400 C.P.S. AM at 30% | AM | 600 Kc/s | AC-VTVM To Point "I" | T7 2nd AM-IF | Adjust for maximum output | 3000 uv. for 70 Mv. output |
| 2 | .05 uf | Pin #7 V6 6BE6 | 455 Kc/s | 400 C.P.S. AM at 30% | AM | 600 Kc/s | AC-VTVM To Point "I" | T5 1st AM-IF | Adjust for maximum output | 100 uv. for 70 Mv. output |
| 3 | 200 uuf | AM Ant. Term. Strip #1 | 600 Kc/s | 400 C.P.S. AM at 30% | AM | 600 Kc/s | AC-VTVM To Point "I" | T10 and T9 AM-Osc. & AM Ant. | Connect for long wire ant. Adjust for Max. output *** | 35 uv. for 70 Mv. output |
| 4 | 200 uuf | AM Ant. Term. Strip #1 | 1400 Kc/s | 400 C.P.S. AM at 30% | AM | 1400 Kc/s | AC-VTVM To Point "I" | C2D and C2B Trimmers | Connect for long wire ant. Adjust for Max. output *** | 45 uv. for 70 Mv. output |
| 5 | Repeat steps 3 and 4, check band coverage at 535 Kc/s - 1650 Kc/s and for tracking at 950 Kc/s. | | | | | | | | | |
| 6 | — | Pin #1 V3 6BA6 | 10.7 Mc/s | Nil | FM | Point of no inter-ference | DC-VTVM To Point "K" | T6, 3rd. FM-IF | Adjust for maximum meter deflection | 10000 uv. for 1V output |
| 7 | — | Pin #1 V3 6BA6 | 10.7 Mc/s | Nil | FM | Point of no inter-ference | DC-VTVM To MX Output | T8 FM Ratio Det. Primary (Bo.t) | Adjust for maximum meter deflection | 1250 uv. for 1V output |
| 8 | — | Pin #1 V3 6BA6 | 10.7 Mc/s | Nil | FM | Point of no inter-ference | DC-VTVM To MX Output | T8 FM Ratio Detector Sec'dary (Top) | Adjust for zero voltage. NOTE ** | — |
| 9 | — | Pin #1 V2 6AU6A | 10.7 Mc/s | Nil | FM | Point of no inter-ference | DC-VTVM To Point "K" | T4 2nd FM-IF | Adjust for maximum meter deflection | 160 uv. for 1V output |
| 10 | — | C1A FM Gang | 10.7 Mc/s | Nil | FM | Point of no inter-ference | DC-VTVM To Point "K" | T3, 1st. FM-IF | Adjust for maximum meter deflection | — |
| 11 | NOTE * | FM Ant. Term. Strip | 90 Mc/s | 400 C.P.S. FM 22.5 Kc/s Dev. | FM | 90 Mc/s | AC-VTVM To Point "H" | T2 Slug and L3 coil | Adjust for maximum output | 3 uv. for 200 Mv. output |
| 12 | NOTE * | FM Ant. Term. Strip | 106 Mc/s | 400 C.P.S. FM 22.5 Kc/s Dev. | FM | 106 Mc/s | AC-VTVM To Point "H" | C1D and C1B Trimmers | Adjust for maximum output | 3 uv. for 200 Mv. output |
| 13 | Repeat steps 11 and 12 until output drops at least 20 db. when mod. is turned off. | | | | | | | | | 3.0 uv. |

NOTE: To achieve more accurate alignment of FM IF's and ratio detector it is preferable to use a proper sweep generator and oscilloscope.

* For FM dummy antenna connect one 150 ohm carbon resistor from grounded side of sig. gen. to antenna terminal and one 120 ohm carbon resistor from hot side of signal generator to antenna terminal.

NOTE: Input to set is one half, output reading of signal generator.

** With ground lead of DC VTVM connected to two 100 K resistors. To be temporarily connected in series across C31 (4 ufd CAP)

*** For AM-RF alignment purpose. The low impedance loop, installed in the cabinet or its electrical equivalent must be connected to the set as shown in the schematic.