Electrohome Models 76 & 712 Automobile Radio

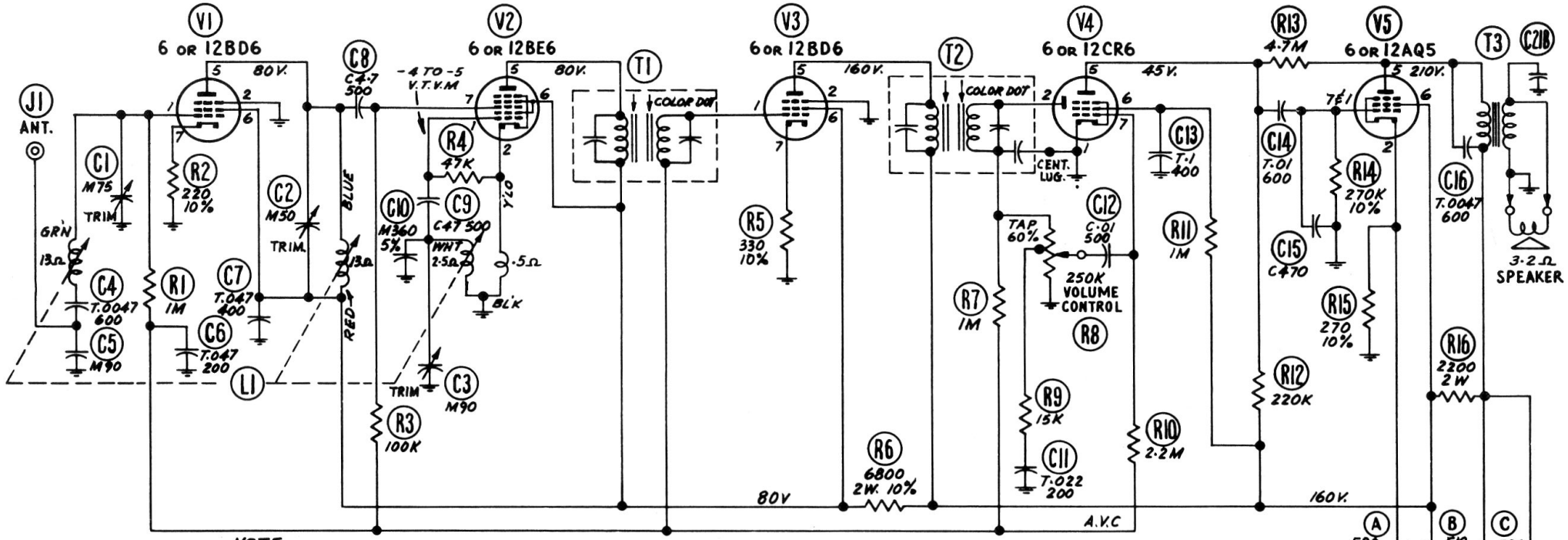

NOTE
RESISTORS R17 & R18:
MODEL 76 – 56 10% 1W.
MODEL 712 – 220 10% 1W.
FUSE F1:
MODEL 76 – 10A.
MODEL 712 – 5A.

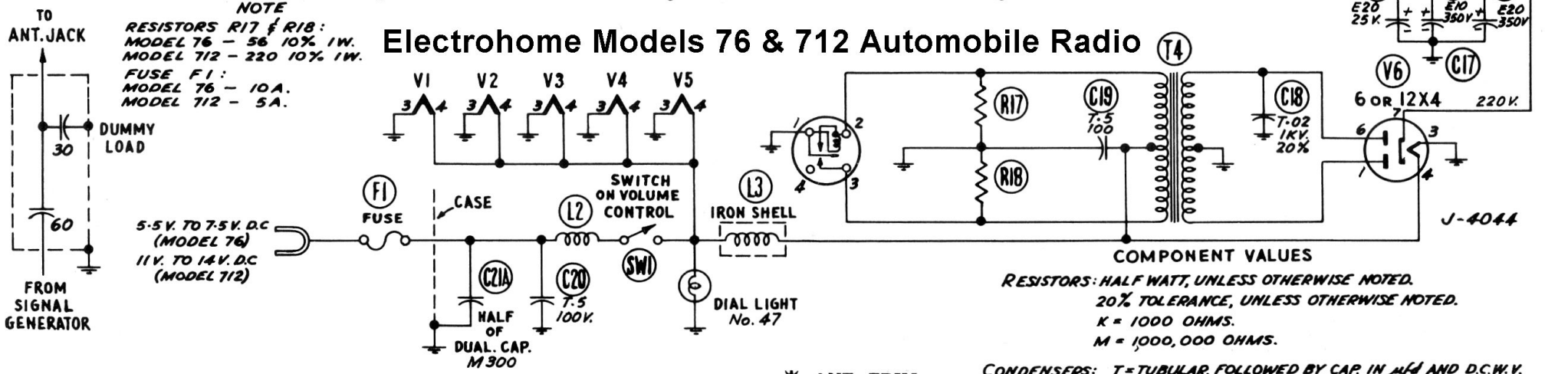

COMPONENT VALUES

RESISTORS: HALF WATT, UNLESS OTHERWISE NOTED.
20% TOLERANCE, UNLESS OTHERWISE NOTED.
K = 1000 OHMS.
M = 1,000,000 OHMS.

CONDENSERS: T = TUBULAR, FOLLOWED BY CAP. IN µfd AND D.C.W.V.
E = ELECTROLYTIC, FOLLOWED BY CAP. IN µfd & D.C.W.V.
C = CERAMIC, FOLLOWED BY CAP. IN µµfd. & TOL. IF CRITICAL.
M = MICA, FOLLOWED BY CAP. IN µµfd & TOL. IF CRITICAL.

ALIGNMENT AND SENSITIVITY

SIGNAL GENERATOR MODULATED 30% AT 400 CYCLES.
OUTPUT ONE WATT INTO 4 OHM LOAD.

STEP	APPLY SIGNAL KC.	APPLY SIGNAL TO	THRU DUMMY SERIES	THRU DUMMY PARALLEL	TUNER POSITION	ADJUST FOR MAX. OUTPUT	SENSITIVITY MICROVOLTS INPUT
1	455	V3 PIN 1	·05 µfd.	—	SLUGS FULL OUT	2ND. I.F SLUGS	20,000
2	455	V2 PIN 7	·05 µfd.	—	SLUGS FULL OUT	1ST. I.F SLUGS	600
3	1605	ANT.	60 µµfd.	30 µµfd.	SLUGS FULL OUT	OSCILLATOR TRIMMER	—
4	1400	ANT.	60 µµfd.	30 µµfd.	SET FOR MAX. OUTPUT	R.F TRIMMER ANT. TRIMMER	5 TO 8
5	AFTER SET IS INSTALLED IN CAR AND WITH ANT. FULLY EXTENDED, TUNE IN WEAK STATION NEAR 1400 KC. AND REPEAK ANT. TRIMMER.						

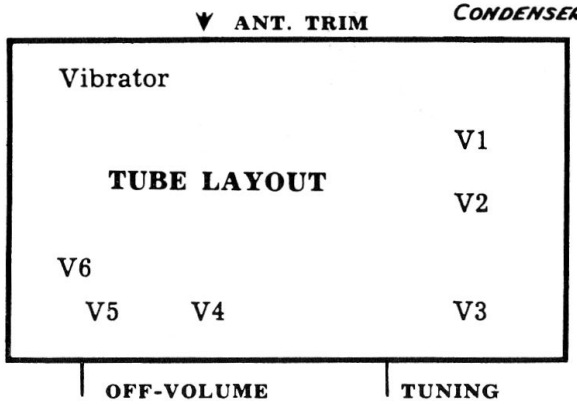

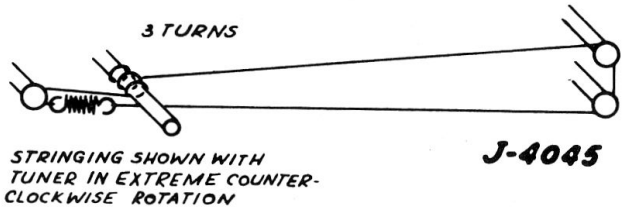

STRINGING SHOWN WITH TUNER IN EXTREME COUNTER-CLOCKWISE ROTATION

STRINGING DETAIL