MODELS C-64 AND C-65

Five-Tube, Single-Band, Superheterodyne Clock Radios

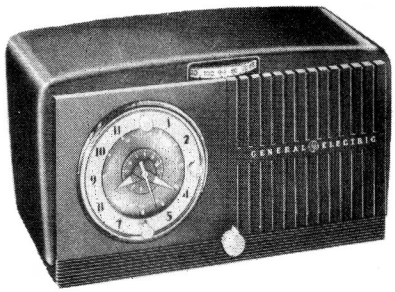

MODEL C-64

SPECIFICATIONS

CABINET:

Model	C64	C65
Color	Brown Mahogany	Ivory
Height	6 3/8 in.	6 3/8 in.
Width	11 1/2 in.	11 1/2 in.
Depth	6 1/4 in.	6 1/4 in.

ELECTRICAL RATING (INPUT)

Voltage ..... 105-125 volts, a-c
Frequency - see nameplate ..... 25 or 60 cycles
Wattage ..... 30 watts

OPERATING FREQUENCIES:

Intermediate Frequency ..... 460 kc
Broadcast Band ..... 540-1620 kc

POWER OUTPUT:

Undistorted ..... 1.1 watts
Maximum ..... 1.5 watts

LOUDSPEAKER:

Type ..... Alnico PM
Outside Cone Diameter ..... 4 inch
Voice Coil Impedance (400 cycles) ..... 3.2 ohms

TUBE COMPLEMENT:

Oscillator-Converter ..... Type 12SA7
I-F Amplifier ..... Type 12SK7
Detector and 1st Audio ..... Type 12SQ7
Power Output ..... Type 50B5
Rectifier ..... Type 35W4

CAUTION: One side of the power line is connected to B-. Avoid any ground connections direct to B-. Use an isolating transformer when making service adjustments with the chassis removed from the cabinet.

ALIGNMENT CHART

Step	Connect Test Oscillator to -	Test Osc. Setting	Dial Drum Setting	Adjust Trimmers for Maximum Output
1	12SK7 grid (4) in series with 0.05 mf.cap. Low side of oscillator to frame of gang.	460 kc	Gang fully meshed	2nd i-f trans. trimmers, C15 and C14.
2	12SA7 grid (8) in series with 0.05 mf.cap. Low side of oscillator to frame of gang.	460 kc	Gang fully meshed	1st i-f trans. trimmers, C9 and C8.
3	Repeat 1 and 2			
4	Antenna clip in series with 200 mmf. cap. and resistor	1620 kc	Gang fully opened	C4(oscillator)
5	Antenna clip in series with 200 mmf. cap. and resistor.	1500 kc	1500 kc	C3 (antenna)

RADIO CIRCUIT ALIGNMENT

ALIGNMENT FREQUENCIES:

R-F ..... 1620 and 1500 kc
I-F ..... 460 kc

EQUIPMENT REQUIRED:

1. Test oscillator with tone modulation.
2. A-c output meter, 1 1/2 volts full scale.
3. 0.05 mf. paper capacitor.
4. 200 mmf. mica capacitor.
5. Metallized fixed resistor, 470 ohms or more.
6. Insulated screwdriver.

PROCEDURE - GENERAL:

1. With the tuning scale control wheel turned so that the gang condenser plates are fully meshed, the index should read approximately 3/16 inch to the right of the 550 kc scale calibration mark. If it does not, remove the control wheel from the gang condenser shaft and replace it for correct position. CAUTION: Do not attempt to correct the position by rotating the wheel on the shaft as this will cause the knob to slip.

2. For i-f alignment, it is necessary to remove the chassis from the cabinet.

3. Connect the output meter across the loudspeaker voice coil terminals.

4. Keep radio volume control at maximum and attenuate the test oscillator signal output so that the output meter reading never exceeds 1.0 volt.

5. Connect the capacitor as listed in column 2 between the output "High Side" of the test oscillator and the point of input specified.

STAGE GAIN AND VOLTAGE CHECKS

Stage gain measurements by vacuum tube voltmeter or similar measuring devices may be used to check circuit performance and isolate trouble. The gain values listed may have tolerances of 20%. Readings taken with low signal input so that AVC is not effective.

(1) R-F and I-F Stage Gains

12SA7 Grid to 12SK7 Grid ..... 50 @ 460 kc
12SK7 Grid to 12SQ7 Diode Plate ..... 70 @ 460 kc

(2) Audio Gain

0.15 volts at 400 cycles across the volume control (R11) with control set at maximum will give approximately 1/2-watt output across the loudspeaker, LS1, voice coil.

(3) Oscillator Grid Bias

D-c voltage developed across the oscillator grid leak (R1) averages 8.5 volts at 1000 kc.

(4) Socket Pin Voltages

Figure 3 shows voltages from all tube pins to B- unless otherwise specified. Voltage readings much higher or lower than those specified may help localize defective components or tubes.

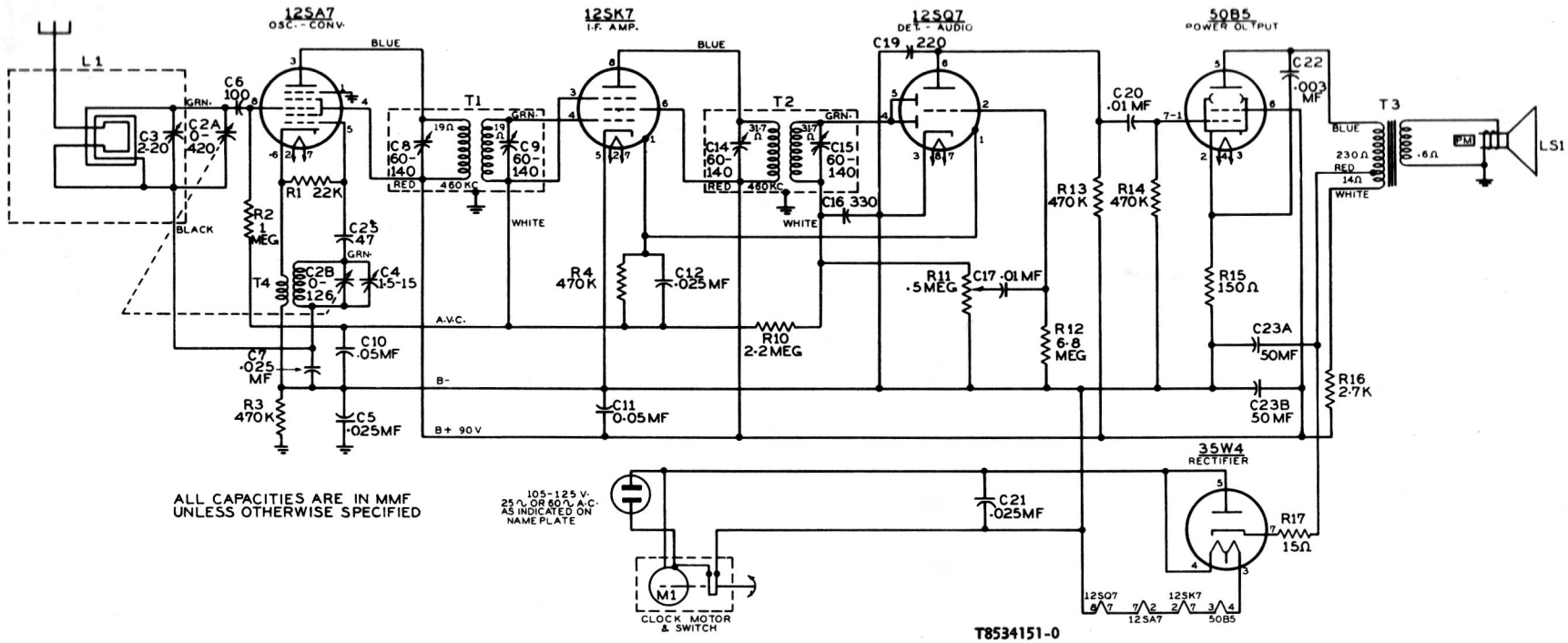

Fig. 1. Schematic Diagram

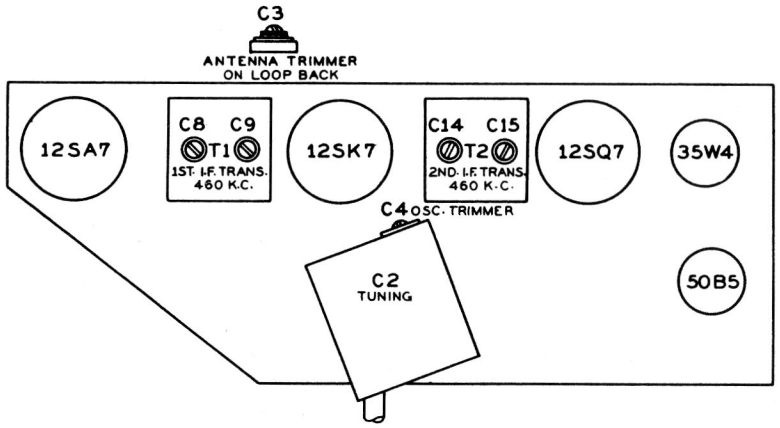

Fig. 2. Tube & Trimmer Location

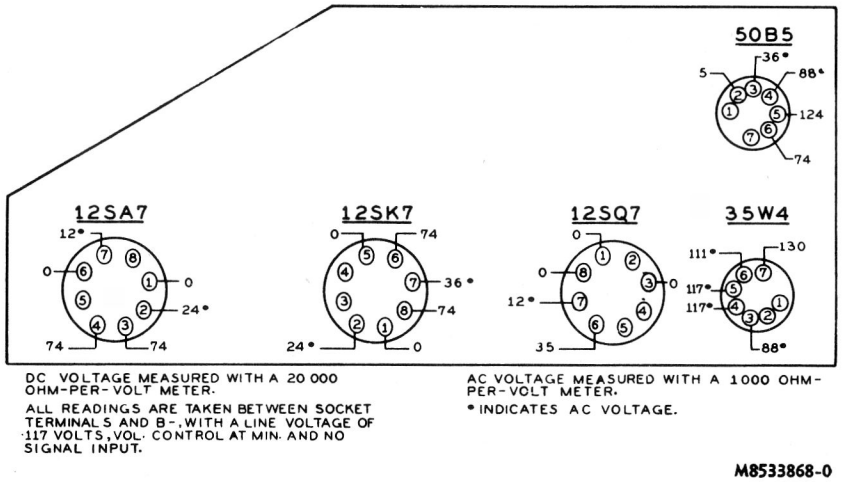

Fig. 3. Socket Voltage Diagram

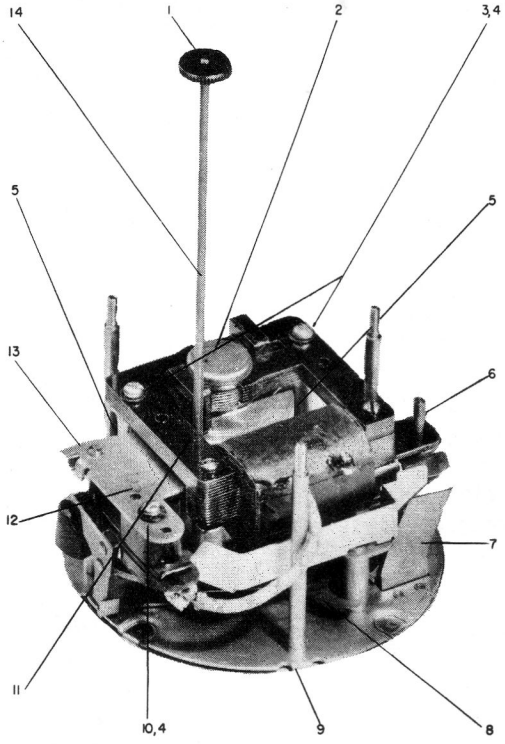

Fig. 4—Back View of Clock

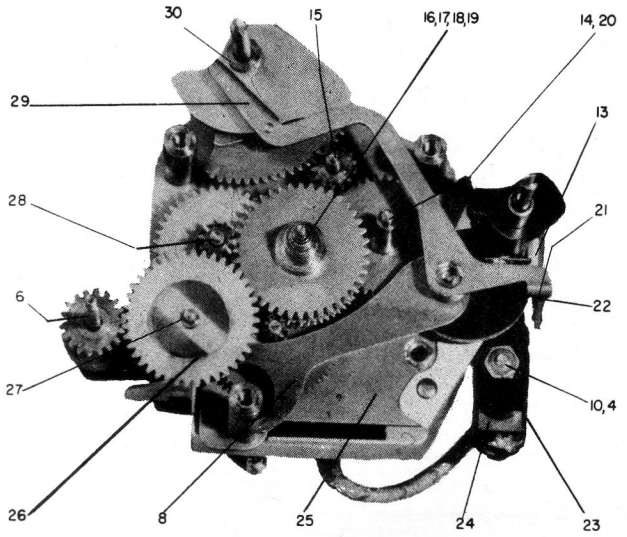

Fig. 5—Front View of Clock, Front Plate Removed

CLOCK SERVICE

Figures 4 and 5 show clock parts referred to in the following paragraphs and the parts list.

CLOCK MOVEMENT DISASSEMBLY

1. Remove clock movement from case. When removing knobs, note that the Alarm-Set knob is a left-hand, thread, while Wake Up-Manual and Sleep are pull-off knobs.

2. Remove Bezel, Hands and Dial Faces.

3. Remove the motor assembly by removing two screws (3 and 4) and break two soldered joints on Field. The Field and Rotor Assembly (11 and 2) can now be removed. The Rotor is held by friction only, to the Field.

4. Remove Switch Assembly by removing two screws (12) from base plate.

5. Remove Switch Shaft Assembly (13) and spacer.

6. Remove Alarm-Set Shaft Assembly (6) and spacer.

7. Remove the three front plate assembly screws, that are located under the Dial Face and then remove Front Plate.

8. Remove the following gear assemblies and control levers in the order listed below:

(a) Sweep Control Shaft and Segment Gear (30)
(b) Alarm Dial Gear (16)
(c) Hour Hand Gear (17)
(d) Alarm Signal Cam and Gear, and Friction Washer (27,26)
(e) Sweep Control Switch Lever (29)
(f) Pinion Drive Gear Assembly (15) (drives Sleep Control Segment Gear)
(g) Alarm Control Switch Cam Lever (8)
(h) Time Set Shaft and Gear, and Spacer (14,20)
(i) Drive Gear and Pinion Assembly (28)
(j) Minute Hand Gear (18)
(k) Sweep Second Hand Gear (19)

CLOCK MOVEMENT REASSEMBLY

Reassemble in the reverse order of disassembly, observing the following precautions:

1. The spring washer (26) should curve away from the gear when placed on the Alarm Cam Gear Assembly (27).
2. The Switch Cam Lever fork (8) must straddle the base plate post as shown in the illustration.
3. After reassembly of front plate, check the Sweep Second Gear (19) through the hole in the base plate to make sure it is free to turn.
4. Proceed with Alarm and Switch Asjustments as described below before installing hands.

ALARM AND SWITCH ADJUSTMENTS

1. Turn Wake Up-Manual shaft to ALARM POSITION.
2. Slowly rotate Time Set shaft clockwise until the contacts 21 and 22 of the Switch Assembly close.
3. Replace Dial Face, Alarm Dial, the Minute, Hour and Second Hands. Set all Hands and Dial so that they indicate 12 o'clock. Make sure all Hands and Alarm Dial are tight on their respective shafts.
4. With Alarm Set Knob pulled out, continue to rotate Time Set shaft clockwise and note that the Alarm vibrator arm drops against field core approximately 3-15 minutes later.
5. Set alarm at some other selected position and make sure mechanism actuates within limits (± minute).
6. Check alarm tone of vibrator. This can be adjusted by either bending bivrator arm nearer or farther away from field core. Bend arm near anchor point.

CLEANING AND LUBRICATION

To clean, completely disassemble and clean all moving parts in carbon tetrachloride or some similar cleaner.

The inside of the sleeves and shaft surfaces may be cleaned of oxidized oil by rubbing with a fine grade of steel wool dampened in carbon tetrachloride.

Do not use too much oil and apply by means of a small wire (drop oiler). Too much oil collects dust and later oxidizes. Use only recommended clock oil, such as Nye's Celebrated Oil which may be purchased from Wm. F. Nye Co., Inc., New Bedford, or equivalent.

CLOCK TROUBLES

1. Clock will not operate-Defective field coil, defective rotor, binding of parts.
2. Clock loses time-Binding parts, too little friction on minute hand sleeve assembly, defective rotor. Clock time set shaft bent and rubs against hole in clock bracket.
3. Noisy clock-Rotor defective, alarm armature improperly adjusted, loose parts, or binding of moving parts.

Two slightly different cabinet designs have been used on Models C64 and C65 clock radios. From a general appearance standpoint, these cabinets are identical except, for a difference in the molding compound used.

From a service standpoint, these cabinets are not interchangeable due to different methods used in fastening the loop back to the cabinet.

The following sketches will provide ready identification of the correct cabinet, loop-back or fastener required for either style.

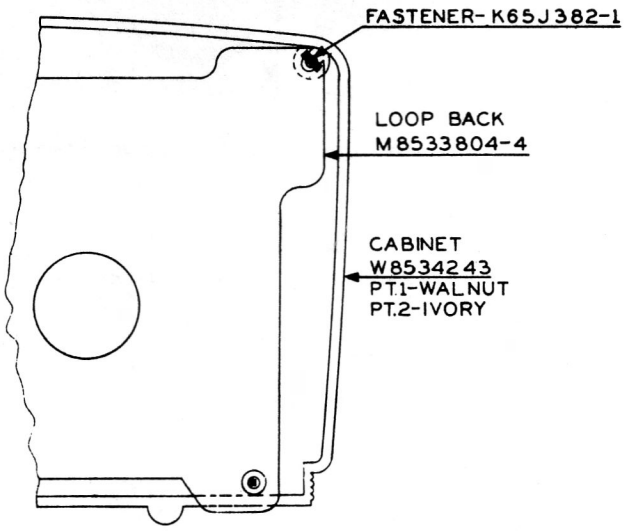

STYLE "A"

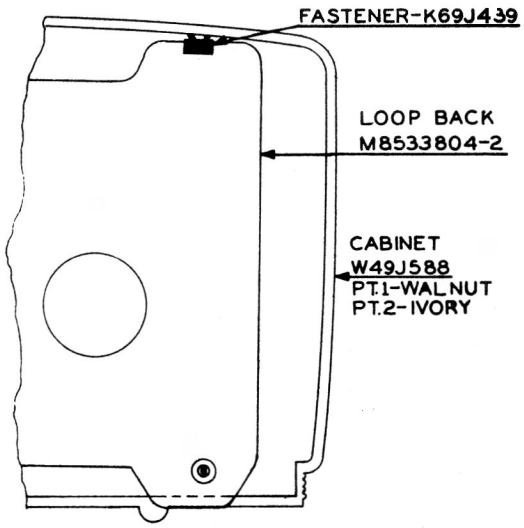

STYLE "B"

REPLACEMENT PARTS LIST			
PART NO. STYLE "A"	PART.NO. STYLE "B"	DESCRIPTION	
W8534243-1	W49J588-1	CABINET - WALNUT	
W8534243-2	W49J588-2	CABINET - IVORY	
M8533804-4	M8533804-2	BACK & LOOP ASSEMBLY	
K65J382-1	K69J439	FASTENER	

REPLACEMENT PARTS LIST

Models C64 and C65

Part No.	Symbol	Description
		Receiver Parts
M8533804-2	L1	Back and Loop Assembly for Cabinet
P74J217-1	T4	Coil - Oscillator Coil
P8534084-1	C2A,C2B	Condenser - Tuning
K8531607-6	C23A C23B	Capacitor - Electrolytic 2-50 mfd.150V
K59J365-7011	C25	Capacitor - 47 mmfd. Ceramic
IRS400C-16		Speaker - 4 inch
K67J214-2		Socket - Tube socket for 35W4,50B5
UCF60636		Socket - Tube Socket
M8533607-1	T1	Transformer - 1st I.F.
M8533608-2	T2	Transformer - 2nd I.F.
		Receiver Parts (Cont'd)
K66J859	T3	Transformer - Output
M76J150-5	R11	Volume Control .05 meg.
		Miscellaneous Parts
W49J588-1		Cabinet (Brown) Plastic for C64
W49J588-2		Cabinet (Ivory) Plastic for C65
M72J542		Knob for Volume Control
M76J170-1		Knob - Tuning Dial Wheel
M76J316-1		Scale - Dial Scale only
M28-164		Spring for Tuning Dial Wheel

†CLOCK REPLACEMENT PARTS LIST

Cat. No.	Symbol	Description
		MISCELLANEOUS
XC3X36	1	KNOB-Time set shaft knob (bronze)
XC4X5		KNOB-Alarm set knob (ivory)
XC31X26		HAND-Sweep second hand
XC32X199		HANDS-Hour and minute hands (luminous)
XC53X31		BEZEL-Outer mounting rim
XC53X117		BEZEL-Numeral ring (gold finish)
XC55X15		DIAL-Alarm dial scale
XC58X16		CRYSTAL-Glass crystal
XC59X247		RING-Color ring for numeral bezel
XC59X716		KNOB-Wake-up Manual and Sleep control knob (ivory)
XC61X937		DIAL-Clock dial scale (Luminous)
		CLOCK MOVEMENT
XC1X1	3	SCREW-Holds field core to baseplate,#4-40 x 1-1/8" long, round head
C1X2	4	LOCKWASHER-Under screw head of switch assembly mounting screw and field core mounting
XC1X6	10	SCREW-Used to assemble switch assembly to switch bracket
XC1X43	23	HEX NUT-For screw mounting switch assembly to switch bracket
XC10X141	14	SHAFT ASSEMBLY-Time set shaft and gear assembly
XC11X11	6	SHAFT ASSEMBLY-Alarm set shaft and gear assembly
XC13X11	17	GEAR ASSEMBLY-Hour hand gear and sleeve assembly
XC14X32	18	GEAR ASSEMBLY-Minute hand friction gear pinion gear and sleeve assembly
XC15X3	16	GEAR ASSEMBLY-Alarm dial gear and sleeve assembly
XC16X14	19	GEAR ASSEMBLY-Sweep second hand gear and shaft assembly
XC17X8	27	GEAR AND CAM-Alarm signal cam and gear assembly
XC34X173	9	FRONT PLATE ASSEMBLY-Complete with case studs and alarm set shaft spring (7)
XC35X93	25	BASE PLATE AND BACK GEAR - Base plate assembled complete with studs, back gear and pinion, and vibrator
		CLOCK MOVEMENT (Cont'd)
XC40X76	24	SWITCH INSULATOR ASSEMBLY- Consists of: two plastic and one fibre switch contact spring spacers
XC40X77	28	GEAR AND SPRING ASSEMBLY-Drives alarm dial gear and hour hand gear (complete with pinion and shaft, pinion and gear, spring, washers and retaining clip)
XC40X80	21	CONTACT ASSEMBLY-Lower switch contact and spring
XC40X185		SPRING-Switch control shaft index spring (for cam indexed control shafts)
XC40X194	29	LEVER-Sleep control switch lever
XC40X196	15	GEAR AND SPRING ASSEMBLY-Pinion drive for sleep control segment gear (consists of pinion gear, pinion gear and shaft, spring, washers, and retaining clip)
XC40X197	8	LEVER-Alarm control switch cam lever
XC40X198	22	CONTACT ASSEMBLY-Upper switch contact and spring with attached fibre arm
XC40X202	5	SPACER BUSHING-Field core spacer at screw mounting to base plate
XC40X252	26	WASHER-Alarm signal cam and gear friction washer
XC40X275		SPACER BUSHING-Wake-up Manual switch control shaft bushing
XC40X276	20	SPACER BUSHING-For time set shaft
XC40X277	30	SHAFT-Sleep control shaft and gear segment assembly
XC44X38	2	MOTOR ROTOR ASSEMBLY-Cased rotor and pinion (60 cycles) M1630
XC44X40	2	MOTOR ROTOR ASSM. 25 cycle (M1632
XC45X73	11	FIELD AND COIL ASSM. 60 cycle
XC45X79	11	FIELD AND COIL ASSM. 25 cycle
XC59X699	13	SHAFT ASSEMBLY-Wake-up Manual control shaft assembly (detent spring index type)
XC59X723	13	SHAFT ASSEMBLY-Wake-up Manual control shaft assembly (cam index type)
XC64X1		SCREW- Switch bracket and front plate mounting screws

Data Subject to Change without Notice.

SMALL CAPACITORS AND RESISTORS NOT LISTED ABOVE ARE READILY AVAILABLE FROM YOUR LOCAL PARTS JOBBER

IMPORTANT: Always mention model No. of Radio when ordering parts.