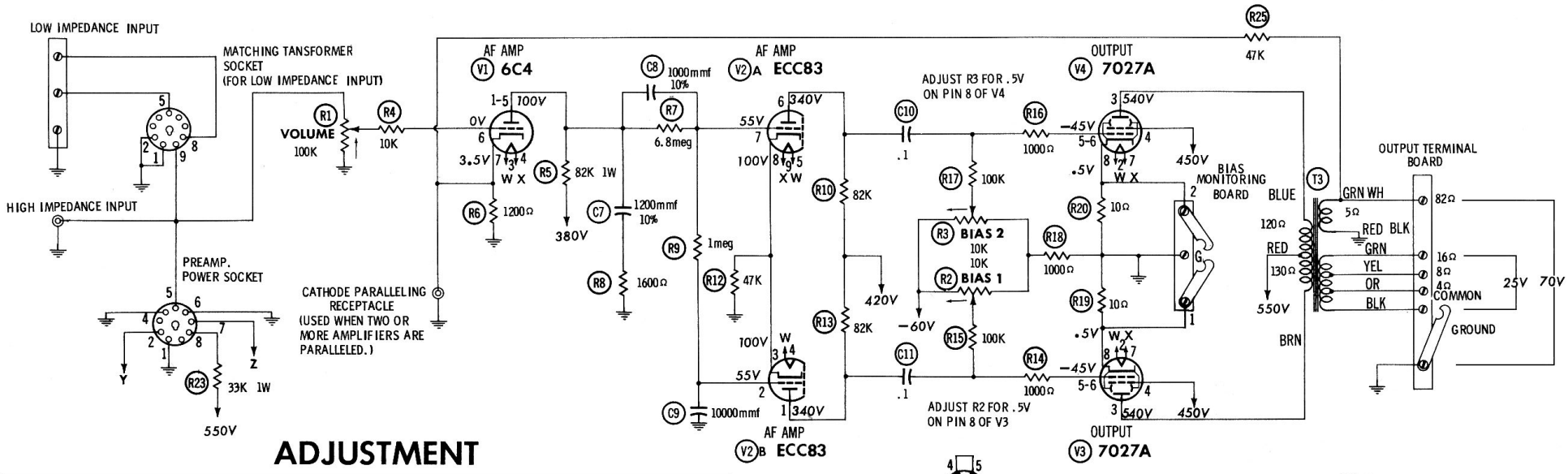

ADJUSTMENT

BIAS ADJUSTMENT (R2, R3)

Set Volume control fully counterclockwise. Rotate Bias #1 and #2 fully clockwise. Remove links on the Bias Terminal strip. Connect DC probe of VTVM to terminal #1 of Bias strip, common to ground terminal. Adjust Bias #1 for .5 volts on VTVM. Move DC probe to terminal #2 and adjust Bias #2 for .5 volts on VTVM. Replace both links.
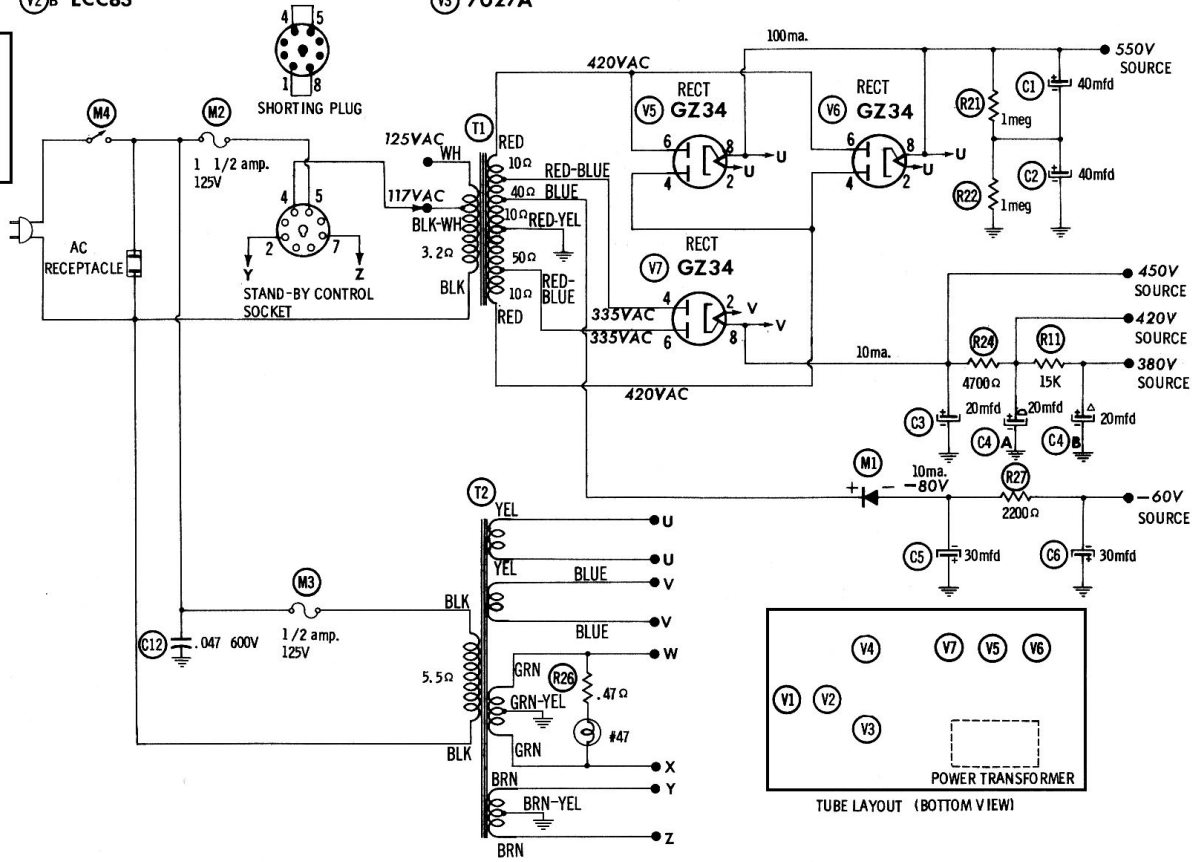
BOGEN MO60