Addison NORGE

SERVICE BULLETIN

ADDISON MODEL 49

AUTOMATIC PHONOGRAPH COMBINATION

A49A.	25 cycle.	Walnut.	B49A.	60 cycle.	Walnut.
A49B.	25 cycle.	Mahogany.	B49B.	60 cycle.	Mahogany.
A49C.	25 cycle.	Bleached Mahogany.	B49C.	60 cycle.	Bleached Mahogany.

TUBE COMPLEMENT

	Type	Function
1	6BA7.	Frequency Converter.
1	6BA6.	I.F. Amplifier.
1	6AT6.	Diode detector - 1st Audio and A.V.C.
2	6AQ5.	Push-Pull Output Stage.
1	5Y3GT/G.	Rectifier.
2	Type 47, 6.3 v., .15 amp. Pilot Bulbs.	

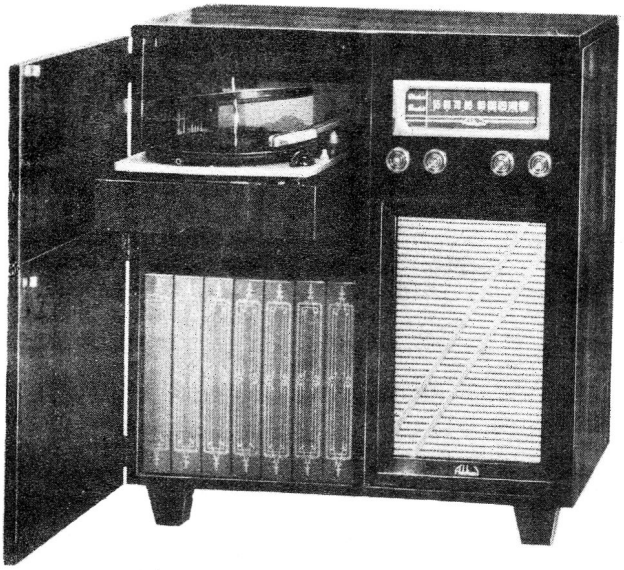

DESCRIPTION

Type - 6 Tube superheterodyne chassis.

Intermediate frequency - 455 KC.

Frequency range - 540 KC. to 1650 KC.

Power Supply - A.C. only.

Voltage rating - 105-125 V.A.C.

Power consumption - 80 watts at power line voltage of 115 v.
20 watts additional for record changer.

Power output - 9 watts at 3.2 ohm load.

The Model 49 employs a powerful six tube superheterodyne chassis, the physical arrangement of which is shown in Figure 1, the electrical circuit is shown in Figure 4. Features of design include:- Built-in Antenna; Continuously variable tone control featuring bass-treble boost circuits; Easily read edge-lit dial; Push-Pull output; and Automatic volume control.

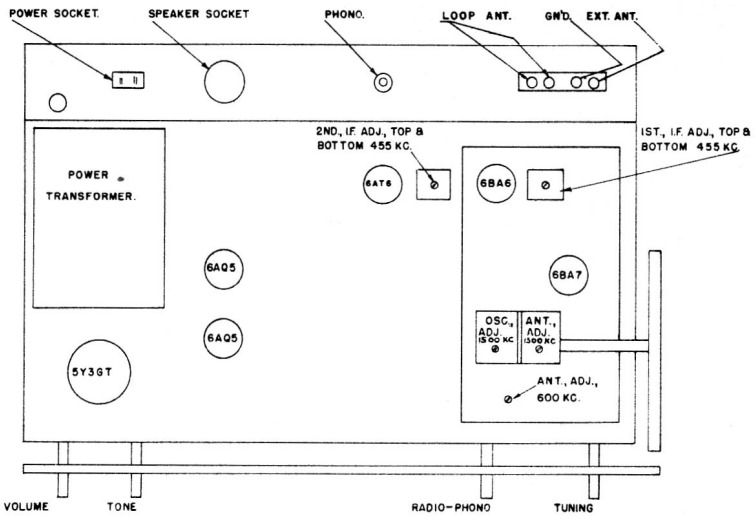

Top and back view of chassis showing tube locations and general layout. —— Fig. 1

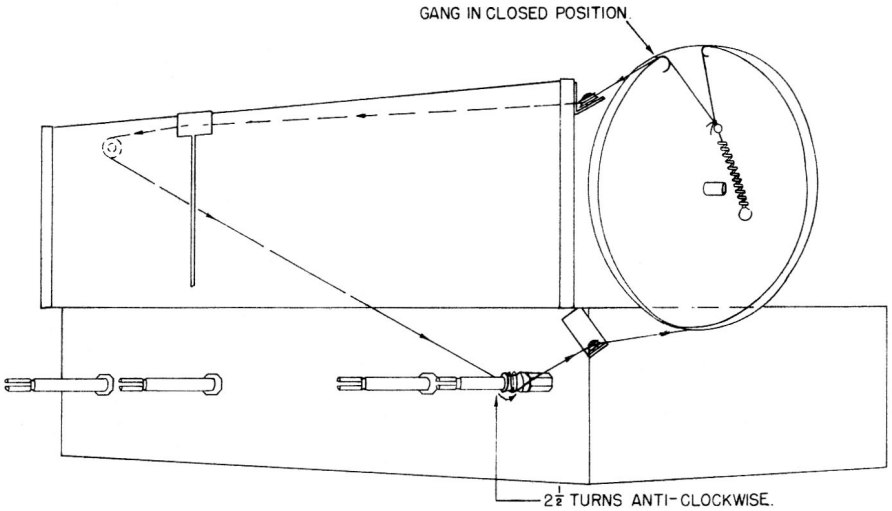

Dial cord arrangement. —— Fig. 2

ALIGNMENT PROCEDURE

All tuned circuits in this receiver have been accurately adjusted at the factory, and any further adjustment should not be necessary. If, however, any re-alignment should later be required, the procedure outlined in the Chart of Alignment, Figure 3, should be followed in the order shown.

Output Meter - Connect meter leads to the voice coil terminals of the Speaker, and turn the receiver volume control to maximum.

Test Oscillator or Signal Generator - For all alignment operations connect the ground side of the test apparatus to the receiver chassis, and keep the output of the test generator as low as possible to avoid A.V.C. action in the receiver.

Alignment Sequence	Test Oscillator			Adjust	Dial set at
	Frequency	In series with	to		
1	455 KC.	.05 mfd.	Antenna Terminal.	1st and 2nd I.F.	1600 KC.
2	600 KC.	200 mmf.	Antenna.	Antenna coil iron core.	600 KC.
3	1500 KC.	200 mmf.	Antenna.	Oscillator trimmer.	1500 KC.
4	1500 KC.	200 mmf.	Antenna.	R.F. trimmer.	1500 KC.

Figure 3.

NOTE:- Loop Antenna should be connected to receiver during alignment procedure.

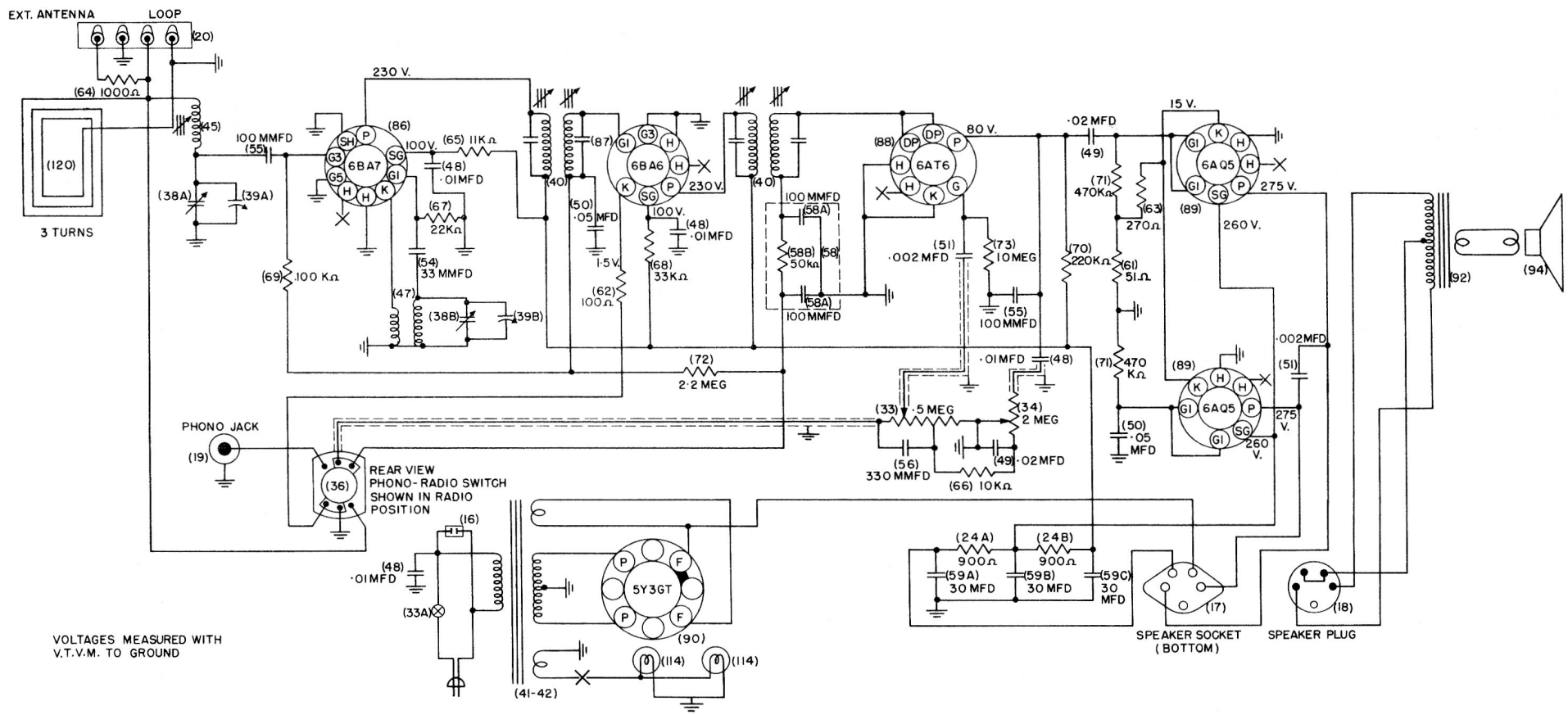
EXT. ANTENNA
LOOP
(20)
(64) 1000Ω
(45)
(120)
3 TURNS
(38A)
(39A)
100 MMFD
(55)
230 V.
(86)
6BA7
100V.
(65) 11KΩ
(48)
·01MFD
(67)
22KΩ
(54)
33 MMFD
(69) 100 KΩ
(47)
(38B)
(39B)
(87)
(40)
(50)
·05 MFD
1·5V.
(62)
100Ω
6BA6
230 V.
100V.
(48)
·01MFD
(68)
33KΩ
(40)
100 MMFD
(58A)
(58B)
50KΩ
(58)
(58A)
100MMFD
(88)
6AT6
80 V.
(51)
·002 MFD
(73)
10MEG
(55)
100MMFD
·02 MFD
(49)
(71)
470KΩ
(63)
270Ω
(70)
220KΩ
(61)
51Ω
15 V.
6AQ5
275 V.
260 V.
(89)
(92)
(94)
·002MFD
(51)
(72)
2·2 MEG
·01MFD
(48)
(71)
470
KΩ
(89)
6AQ5
275
V.
260
V.
(50)
·05
MFD
(33) ·5 MEG
(34)
2 MEG
(56)
330 MMFD
(49) ·02MFD
(66) 10KΩ
PHONO JACK
(19)
(36)
REAR VIEW
PHONO-RADIO SWITCH
SHOWN IN RADIO
POSITION
(16)
(48)
·01MFD
(33A)
5Y3GT
(90)
(41-42)
(114)
(114)
(24A)
900Ω
(59A)
30 MFD
(24B)
900Ω
(59B)
30 MFD
(59C)
30
MFD
(17)
SPEAKER SOCKET
(BOTTOM)
(18)
SPEAKER PLUG
VOLTAGES MEASURED WITH
V.T.V.M. TO GROUND

Fig. 4

PARTS LIST

CODE NO.	PART NO.	DESCRIPTION.
24A-B.	14-10.	Resistor - Dual 900 ohm. MW2.
29.	2-10.	Dial pulley.
33-33A.	27-10.	Volume control and A.C. switch.
34.	27-11.	Tone control.
36.	27-12.	Radio-Phono switch.
37.	19-11.	Dial drive shaft.
38A.	15-10.	2 section Tuning Condenser. { Antenna section.
38B.		Oscillator section.
40.	23-13.	I.F. transformer.
41.	23-11.	Power transformer - 60 cycle.
42.	23-12.	Power transformer - 25 cycle.
45.	29-10.	Antenna coil.
47.	29-11.	Oscillator coil.
48.		Condenser - .01 mfd. 600 w.v. Tubular.
49.		" - .02 mfd. 600 w.v. "
50.		" .05 mfd. 400 w.v. "
51.		" - .002 mfd. 600 w.v. "
54.		" - 33 mmfd. 500 v. 20% Ceramic.
55.		" - 100 mmfd. 500 v. 20% "
56.		" - 330 mmfd. 500 v. 20% "
58A.	18-10.	Capristor { 100 mmfd. Condenser.
58A.		" { 100 " "
58B.		" { 50K ohms. Resistor.
59A.	18-11.	Filter { 30 mfd. 450 v.w.
59B.		Condenser { 30 " 400 v.w.
59C.		" { 30 " 350 v.w.
61.		Resistor - 51 ohms. 1/2 w. 5%
62.		" - 100 " 1/2 w. 10%
63.		" - 270 " 1 w. 10%
64.		" - 1,000 " 1/2 w. 20%
65.		" - 11,000 " 1 w. 20%
66.		" - 10,000 " 1/2 w. 20%
67.		" - 22,000 " 1/2 w. 20%
68.		" - 33,000 " 1/2 w. 20%
69.		" - 100,000 " 1/2 w. 20%
70.		" - 220,000 " 1/2 w. 20%
71.		" - 470,000 " 1/2 w. 20%
72.		" - 2.2 megohms. 1/2 w. 20%
73.		" - 10 " 1/2 w. 20%
92.	23-10.	Output transformer.
94.	24-10.	Speaker 10" P.M. 3.2 ohm. V.C.
107.	43-10A.	Dial glass - gold.
108.	43-10B.	Dial glass - grey.
110.	45-10.	Dial pointer.
124.	51-10-A.	Knob - plain.
125.	51-10-B.	Knob - spot.